思源电子 sydzi.taobao.com 为您提供维修手机.笔记本.电脑图纸

1. ALL RESISTANCE VALUES ARE IN OHMS, 0.1 WATT +/- 5%.
2. ALL CAPACITANCE VALUES ARE IN MICROFARADS.
3. ALL CRYSTALS & OSCILLATOR VALUES ARE IN HERTZ.

REV	ECN	DESCRIPTION OF REVISION	CK APPD / DATE
11	0001447874	ENGINEERING RELEASED	2012-05-02

N41 SINGLE_BRD EVT3

Mon Apr 30 16:28:35 2012

sydzi.taobao.com
思源电子为您服务！
QQ: 2356146104

PDF PAGE	CSA PAGE	CONTENTS	SYNC MASTER	DATE
2	2	H5P JTAG, USB ,PLL ← JTAG USB PLL接口		N/A
3	3	H5P GPIO & CONTROL ← GPIO接口、控制接口		N/A
4	4	H5P IO POWER ← IO电源	N/A	N/A
5	5	H5P SOC/CPU/SRAM PWR ← SOC，CPU，SRAM供电		
6	6	H5P W/ NAND ← NAND存储器电路	N/A	N/A
7	7	H5P VIDEO ← 视频电路	N/A	N/A
8	8	BUTTON CONNECTOR ← 按键连接器电路		N/A
9	9	CS42L65 AUDIO CODEC (1/2) ← 音频编解码电路	N	/A
10	10	CS42L65 AUDIO CODEC (2/2) ← 音频编解码电路	N	/A
11	11	CG FLEX CONNECTOR ← 排线接口	N/A	N/A
12	12	AGATHA PMU(1/2) ← 电源管理电路	/A	N/A
13	13	AGATHA PMU(2/2) ← 电源管理电路	/A	N/A
14	14	ACCEL,GYRO,COMPASS,SPK AMP ← 加速计，陀螺仪。指南针，音频放大器	N/A	
15	15	TRISTAR ← 三星电路	N/A	N/A
16	16	DOCK CONNECTOR ← DOCK接口	N/A	N/A
17	17	GRAPE & CONNECTOR ← 触摸屏连接器		N/A
18	18	LCM CONNECTOR ← LCM连接器	N/A	N/A
19	19	STROBE & NEGATIVE RAIL ← 闪光灯，负压电路		N/A
20	20	CAM0 CONNECTOR ← 照相机接口	N/A	N/A
21	21	BATTERY & RF INT ← 电池接口，射频接口		N/A
22	22	TEST POINTS ← 测试点	N/A	N/A

SCH 051-9113
BRD 820-3141
MCO 056-4519
BOM 639-3259 (16GB) BTR N41
BOM 639-3420 (32GB) BST N41
BOM 639-3421 (64GB) ULT N41

BOM 639-2456 (16GB) BTR N42
BOM 639-3858 (32GB) BST N42
BOM 639-3839 (64GB) ULT N42

N41 BOM CALLOUTS

PART#	QTY	DESCRIPTION	REFERENCE DESIGNATOR(S)	CRITICAL	BOM OPTION
051-9113	1	N41 SINGLE_BRD SCHEMATIC	SCH	Y	?
820-3141	1	N41 SINGLE_BRD PCB	PCB	Y	?
825-6383	1	LABEL FOR N41 639-3259	EEEE_DWJG	Y	EEEE_16G
825-6383	1	LABEL FOR N41 639-3420	EEEE_DY6Q	Y	EEEE_32G
825-6383	1	LABEL FOR N41 639-3421	EEEE_DY6R	Y	EEEE_64G
825-6383	1	LABEL FOR N42 639-2456	EEEE_DNVD	Y	EEEE_16G_N42
825-6383	1	LABEL FOR N41 639-3858	EEEE_F322	Y	EEEE_32G_N42
825-6383	1	LABEL FOR N41 639-3859	EEEE_F321	Y	EEEE_64G_N42

N41 = BAND 17 COMP
N42 = BAND 13 COMP

NAND OPTIONS

PART#	QTY	DESCRIPTION	REFERENCE DESIGNATOR(S)	CRITICAL	BOM OPTION
335S0871	1	NAND,20NM,16GX8,MLC,PPN1.5	U4	?	NAND_16G
335S0872	1	NAND,20NM,32GX8,MLC,PPN1.5	U4	?	NAND_32G
335S0873	1	NAND,20NM,64GX8,MLC,PPN1.5	U4	?	NAND_64G

RADIO_MLB TDMA CAP OPTION

PART#	QTY	DESCRIPTION	REFERENCE DESIGNATOR(S)	CRITICAL	BOM OPTION
138S0711	3	10UF 0402 6.3V RANDOM	C235_RF,C236_RF,C237_RF	Y	?
138S0711	2	10UF 0402 6.3V RANDOM	C1201_RF,C1801_RF	Y	?

INDUCTOR 607-XXXX SUBBOM GEN

PART#	QTY	DESCRIPTION	REFERENCE DESIGNATOR(S)	CRITICAL	BOM OPTION
152S1547	4	IND,PWR,1.5UH,1.95A,111MOHM,2520	L10,L50,L14,L54	Y	CPU0_1_TDK_SUBBOM
152S1696	3	IND,PWR,2.2UH,1.45A,138MOHM,2520	L11,L12,L13	Y	SOC_CYNTC_SUBBOM
152S1695	4	IND,PWR,1.5UH,1.95A,111MOHM,2520	L10,L50,L14,L54	Y	CPU0_1_CYNTC_SUBBOM
152S1432	3	IND,PWR,2.2UH,1.45A,125MOHM,2520	L11,L12,L13	Y	SOC_TDK_SUBBOM

INDUCTOR SUBBOM ADDITION

PART#	QTY	DESCRIPTION	REFERENCE DESIGNATOR(S)	CRITICAL	BOM OPTION
607-9979	1	CPU0_1,PWR IND SUBBOM	CPU_IND	Y	?
607-9980	1	SOC,PWR IND SUBBOM	SOC_IND	Y	?

PART NUMBER	ALTERNATE FOR PART NUMBER	BOM OPTION	REF DES	COMMENTS:
335S0895	335S0874	?	U601_RF	WINBOND ALT
197S0437	197S0410	?	Y301_RF	KYROCERA 19.2MHZ XTAL ALT
197S0409	197S0410	?	Y301_RF	RAKON 19.2MHZ XTAL ALT

ALTERNATES

PART NUMBER	ALTERNATE FOR PART NUMBER	BOM OPTION	REF DES	COMMENTS:
138S0648	138S0652	?	?	4.7UF CERM 0402 6.3V
138S0703	138S0648	?	?	4.7UF CERM 0402 6.3V
138S0702	138S0657	?	?	4.3UF CERM 0610 4V
138S0697	138S0695	?	?	1UF CERM 0204 4V
138S0746	138S0705	?	?	10UF CERM 0402 10V
138S0739	138S0706	?	?	1UF CERM 0201 10V
197S0369	197S0392	?	?	TXC 32KHZ XTAL ALT
197S0399	197S0392	?	?	NDK 32KHZ XTAL ALT
155S0667	155S0583	?	?	PANASONIC CMC
107S0146	107S0208	?	?	TDK 10K NTC ALT
152S1696	152S1432	?	L2	CYNTEC 2.2UH IND ALT
152S1604	152S1518	?	L16	TDK 2.2UH IND ALT
152S1602	152S1518	?	L16	CYNTEC 2.2UH IND ALT
152S1602	152S1604	?	L19	CYNTEC 2.2UH IND ALT
311S0591	311S0273	?	?	74LVC1G32 OR GATE ALT
311S0548	311S0398	?	?	74AUP1G08 AND GATE ALT
311S0560	311S0515	?	?	74LV2G07 BUFFER ALT
339S0177	339S0176	?	?	H5P ALT
339S0178	339S0176	?	?	H5P ALT
155S0773	155S0453	?	?	TAIYO ALT FERRITE

PART NUMBER	ALTERNATE FOR PART NUMBER	BOM OPTION	REF DES	COMMENTS:
335S0878	335S0871	NAND_16G	U4	TOSHIBA 16G
335S0881	335S0871	NAND_16G	U4	SAMSUNG 16G
335S0900	335S0871	NAND_16G	U4	SANDISK 16G
335S0879	335S0872	NAND_32G	U4	TOSHIBA 32G
335S0882	335S0872	NAND_32G	U4	SAMSUNG 32G
335S0901	335S0872	NAND_32G	U4	SANDISK 32G
335S0880	335S0873	NAND_64G	U4	TOSHIBA 64G
335S0883	335S0873	NAND_64G	U4	SAMSUNG 64G
335S0902	335S0873	NAND_64G	U4	SANDISK 64G

PART NUMBER	ALTERNATE FOR PART NUMBER	BOM OPTION	REF DES	COMMENTS:
607-9983	607-9979	?	CPU_IND	ALT CPU CYNTEC SUBBOM
607-9984	607-9980	?	SOC_IND	ALT SOC CYNTEC SUBBOM

DRAWING TITLE: SCHEM,MLB,N41

Apple Inc.

DRAWING NUMBER: 051-9113 SIZE: D
REVISION: 11.0.0
BRANCH:
PAGE: 1 OF 24
SHEET: 1 OF 51

NOTICE OF PROPRIETARY PROPERTY:
THE INFORMATION CONTAINED HEREIN IS THE PROPRIETARY PROPERTY OF APPLE INC.
THE POSESSOR AGREES TO THE FOLLOWING:
I TO MAINTAIN THIS DOCUMENT IN CONFIDENCE
II NOT TO REPRODUCE OR COPY IT
III NOT TO REVEAL OR PUBLISH IT IN WHOLE OR PART
IV ALL RIGHTS RESERVED

思源电子 sydzi.taobao.com 为您提供维修手机.笔记本.电脑图纸

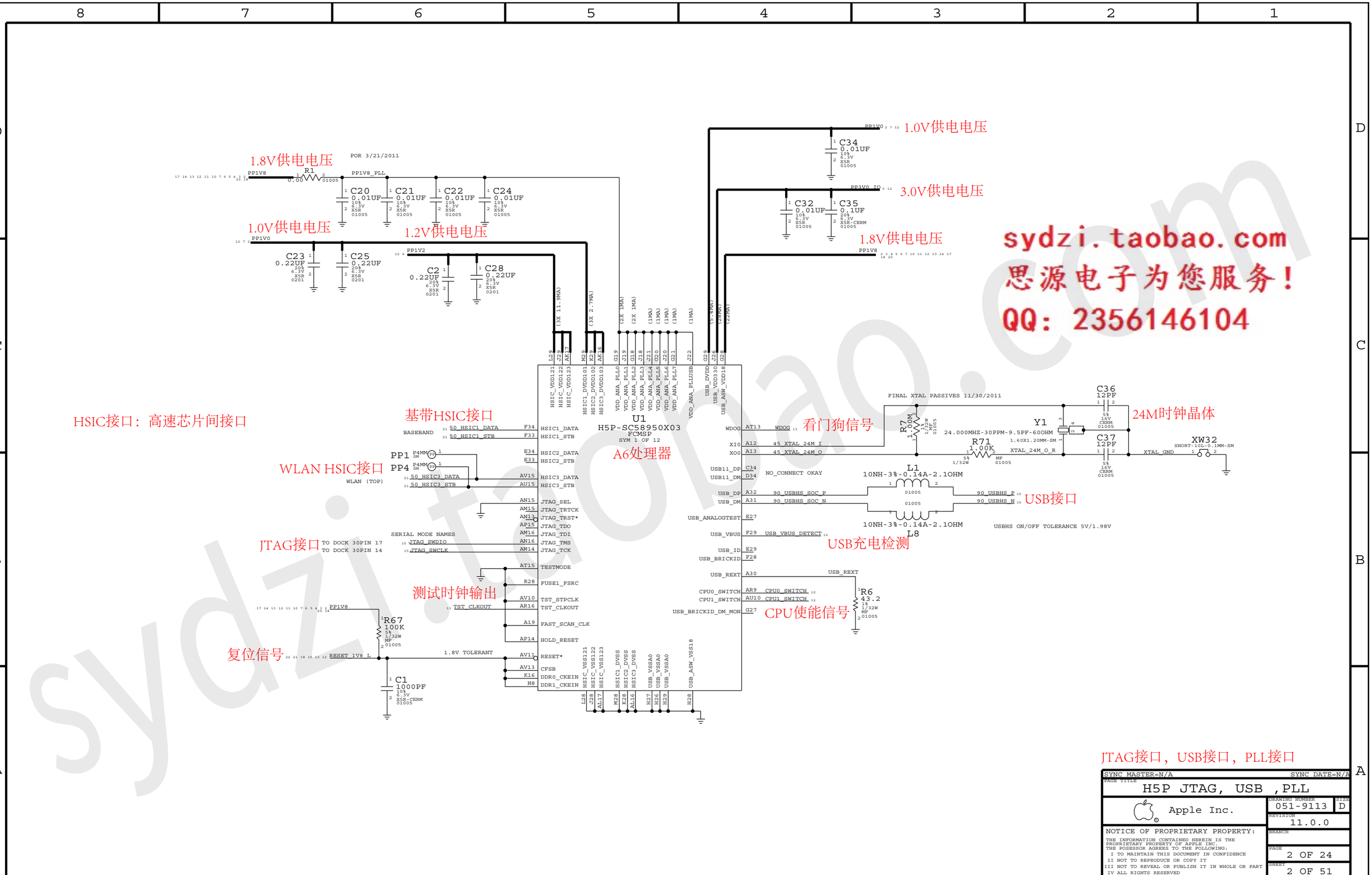

sydzi.taobao.com
思源电子为您服务！
QQ: 2356146104

思源电子 sydzi.taobao.com 为您提供维修手机.笔记本.电脑图纸

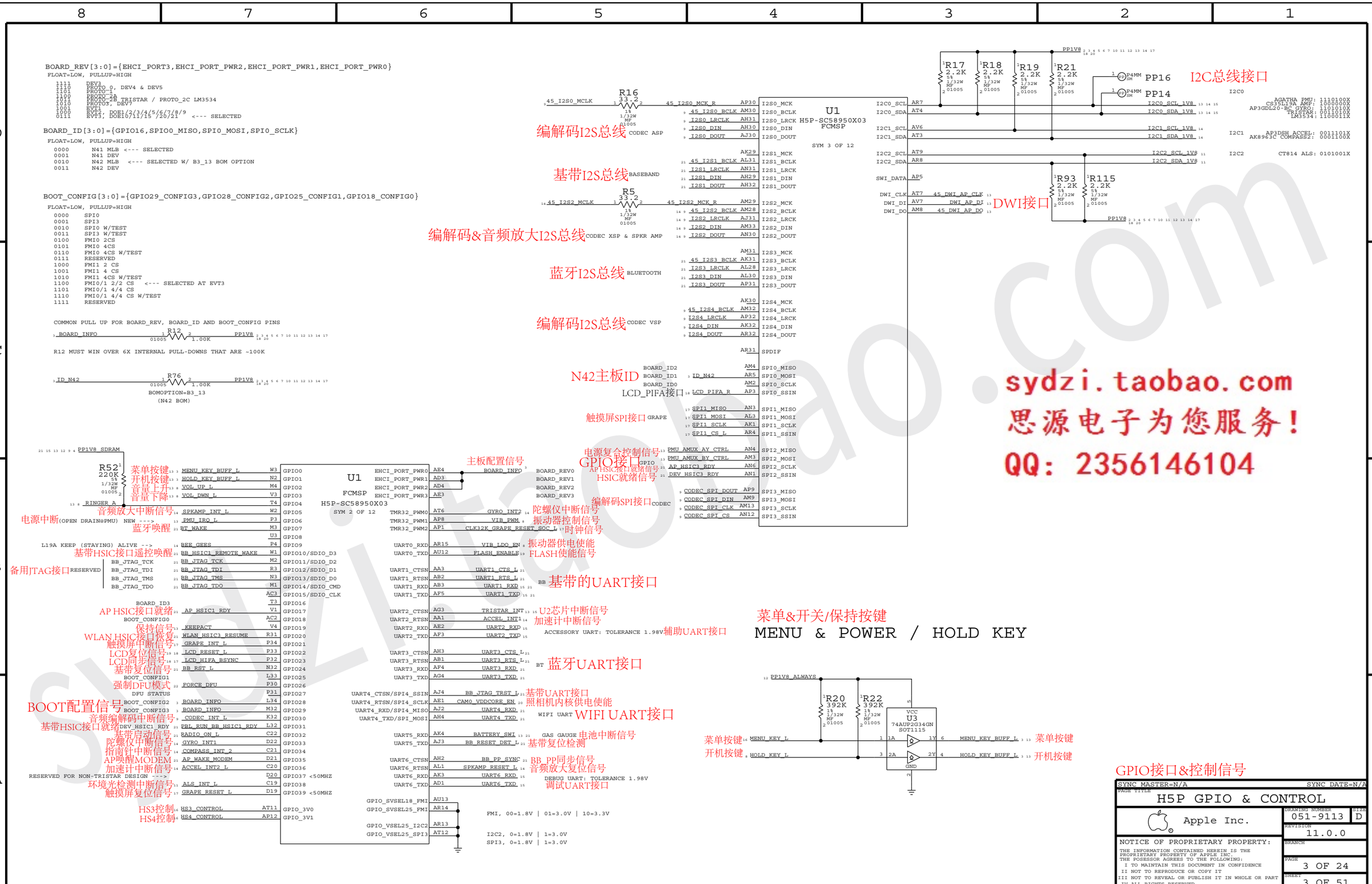

sydzi.taobao.com
思源电子为您服务！
QQ: 2356146104

思源电子 sydzi.taobao.com 为您提供维修手机.笔记本.电脑图纸

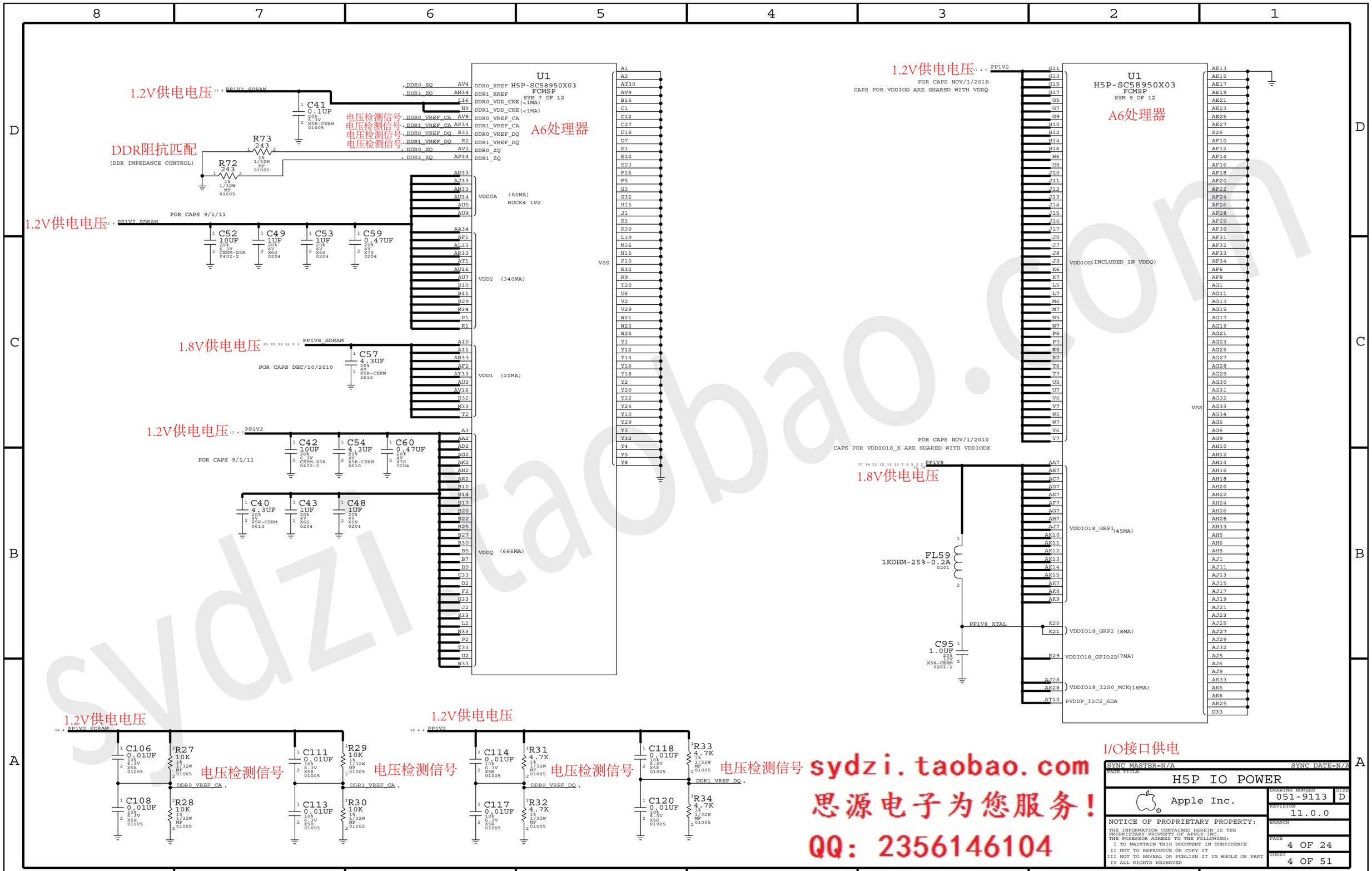

sydzi.taobao.com
思源电子为您服务！
QQ: 2356146104

思源电子 sydzi.taobao.com 为您提供维修手机.笔记本.电脑图纸

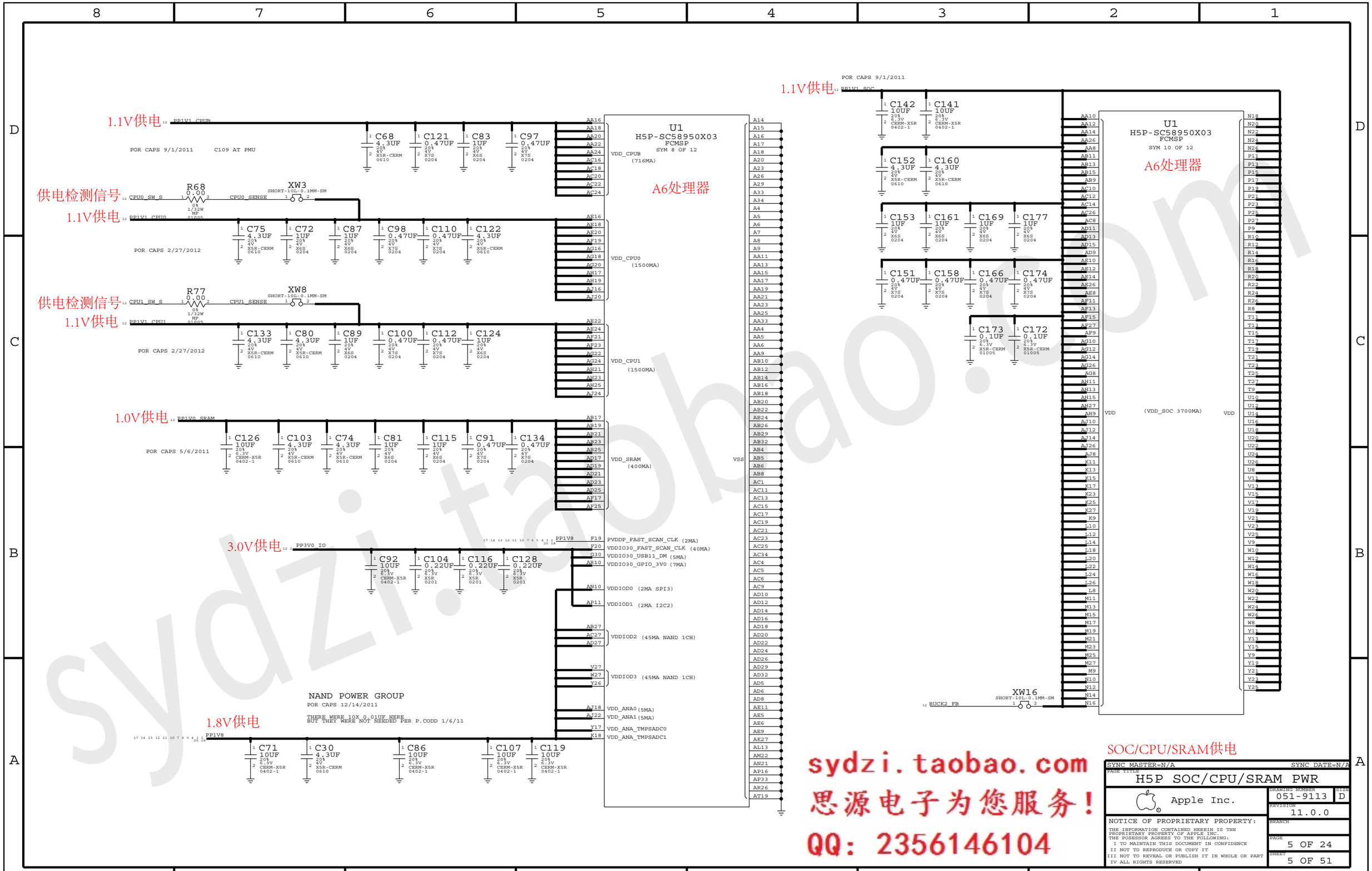

sydzi.taobao.com
思源电子为您服务！
QQ: 2356146104

思源电子 sydzi.taobao.com 为您提供维修手机.笔记本.电脑图纸

NAND

SUPPORT FOR PPN1.5 AND PPN1.0 W/ 1.8V IO ONLY

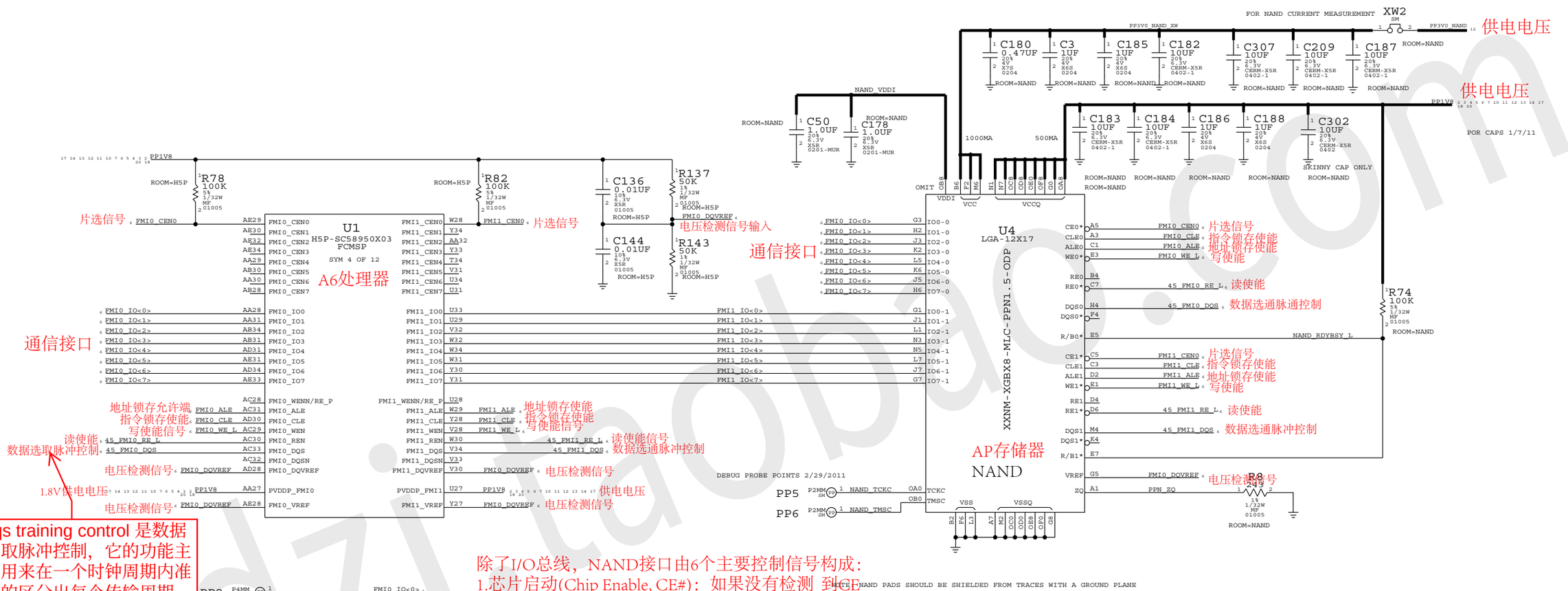

dqs training control 是数据选取脉冲控制，它的功能主要用来在一个时钟周期内准确的区分出每个传输周期，并便于接收方准确接收数据。每一颗芯片都有一个dqs 信号线，它是双向的，在写入时它用来传送由CPU发来的dqs 信号，读取时，则由芯片生成dqs 向CPU发送。完全可以说，它就是数据的同步信号。

除了I/O总线，NAND接口由6个主要控制信号构成：

1.芯片启动(Chip Enable, CE#)：如果没有检测 到CE信号，那么，NAND器件就保持待机模式，不 对任何控制信号作出响应。

2.写使能(Write Enable, WE#): WE#负责将数据、 地址或指令写入NAND之中。

3.读使能(Read Enable, RE#): RE#允许输出数 据缓冲器。

4.指令锁存使能(Command Latch Enable, CLE): 当 CLE为高时，在WE#信号的上升沿，指令被锁存到 NAND指令寄存器中。

5.地址锁存使能(Address Latch Enable, ALE)： 当ALE为高时，在WE#信号的上升沿，地址被锁存 到NAND地址寄存器中。

6.就绪/忙(Ready/Busy, R/B#)：如果NAND器件 忙，R/B#信号将变低。该信号是漏极开路，需要 采用上拉电阻。数据每次进/出NAND寄存器都是通过16位或8位接 口。当进行编程操作的时候，待编程的数据进入 数据寄存器，处于在WE#信号的上升沿，在寄存器 内随机存取或移动数据，要采用专用指令以便于随 机存取。

sydzi.taobao.com
思源电子为您服务！
QQ: 2356146104

NAND存储器

SYNC MASTER=N/A	SYNC DATE=N/A
PAGE TITLE: H5P W/ NAND	
Apple Inc.	DRAWING NUMBER 051-9113 SIZE D
	REVISION 11.0.0
NOTICE OF PROPRIETARY PROPERTY: THE INFORMATION CONTAINED HEREIN IS THE PROPRIETARY PROPERTY OF APPLE INC. THE POSESSOR AGREES TO THE FOLLOWING: I TO MAINTAIN THIS DOCUMENT IN CONFIDENCE II NOT TO REPRODUCE OR COPY IT III NOT TO REVEAL OR PUBLISH IT IN WHOLE OR PART IV ALL RIGHTS RESERVED	BRANCH
	PAGE 6 OF 24
	SHEET 6 OF 51

思源电子 sydzi.taobao.com 为您提供维修手机.笔记本.电脑图纸

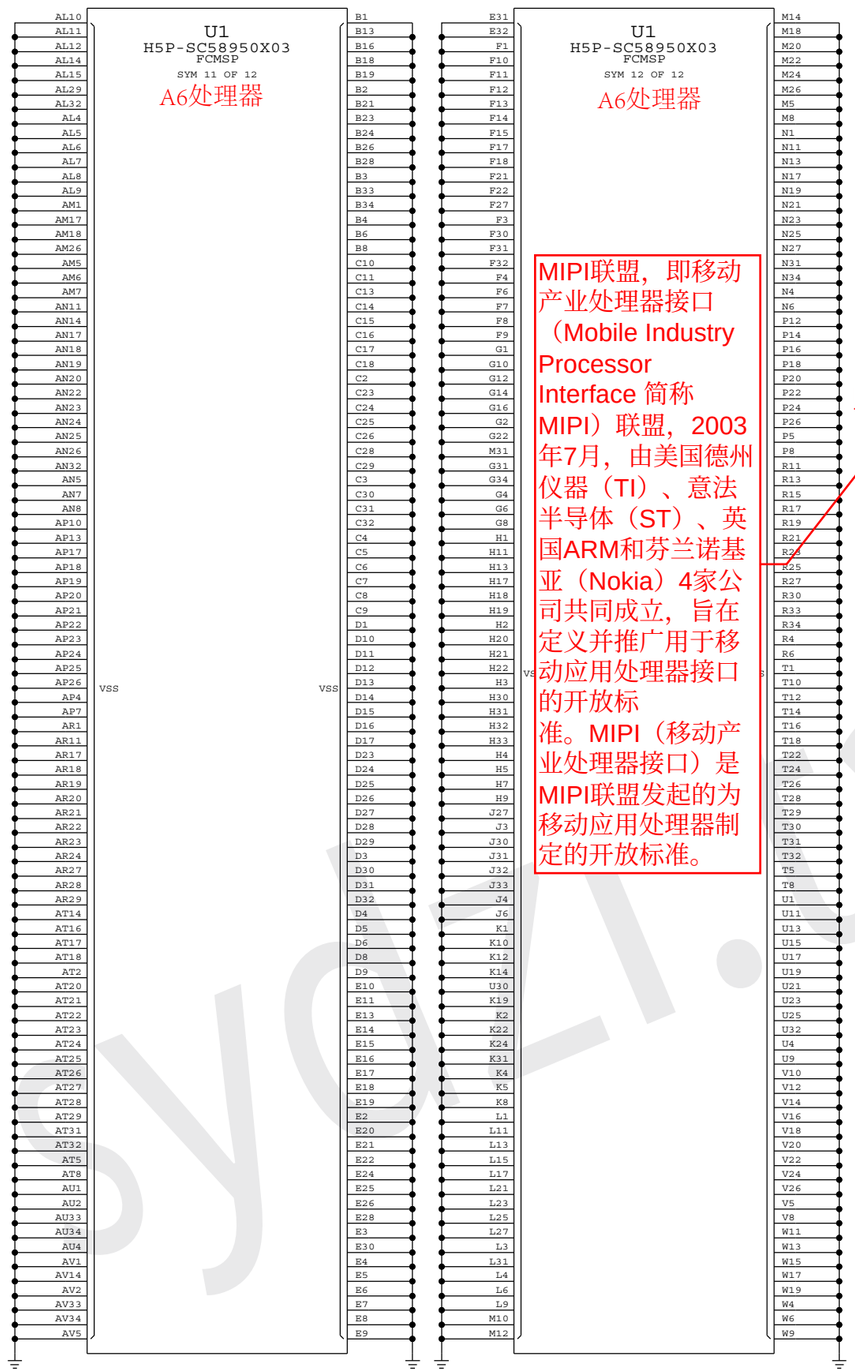

MIPI联盟，即移动产业处理器接口（Mobile Industry Processor Interface 简称MIPI）联盟，2003年7月，由美国德州仪器（TI）、意法半导体（ST）、英国ARM和芬兰诺基亚（Nokia）4家公司共同成立，旨在定义并推广用于移动应用处理器接口的开放标准。MIPI（移动产业处理器接口）是MIPI联盟发起的为移动应用处理器制定的开放标准。

照相机MIPI接口

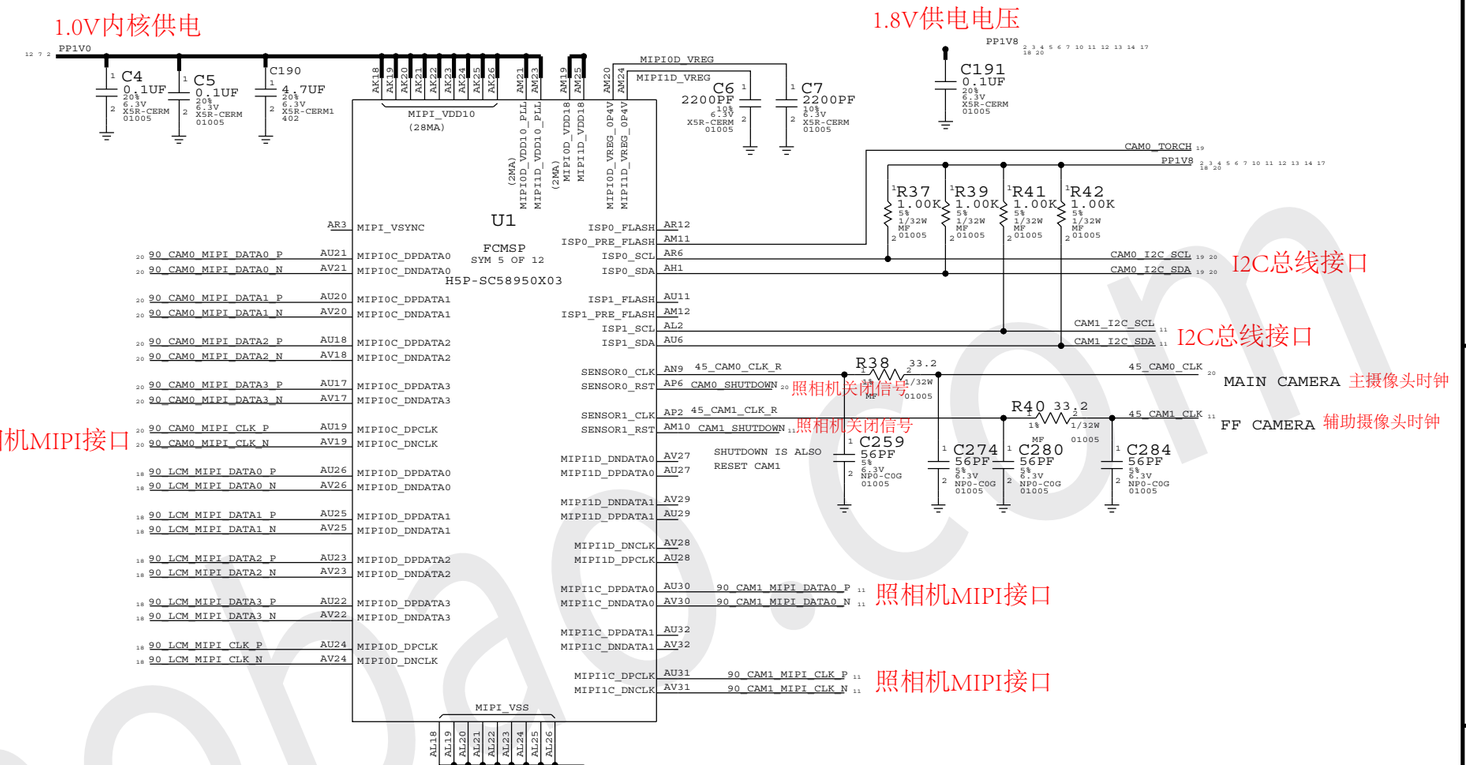

sydzi.taobao.com
思源电子为您服务！
QQ: 2356146104

视频部分

SYNC MASTER=N/A SYNC DATE=N/A

PAGE TITLE: H5P VIDEO

Apple Inc.

DRAWING NUMBER: 051-9113 SIZE: D

REVISION: 11.0.0

BRANCH:

PAGE: 7 OF 24

SHEET: 7 OF 51

NOTICE OF PROPRIETARY PROPERTY:
THE INFORMATION CONTAINED HEREIN IS THE PROPRIETARY PROPERTY OF APPLE INC.
THE POSESSOR AGREES TO THE FOLLOWING:
I TO MAINTAIN THIS DOCUMENT IN CONFIDENCE
II NOT TO REPRODUCE OR COPY IT
III NOT TO REVEAL OR PUBLISH IT IN WHOLE OR PART
IV ALL RIGHTS RESERVED

思源电子 sydzi.taobao.com 为您提供维修手机.笔记本.电脑图纸

sydzi.taobao.com
思源电子为您服务！
QQ: 2356146104

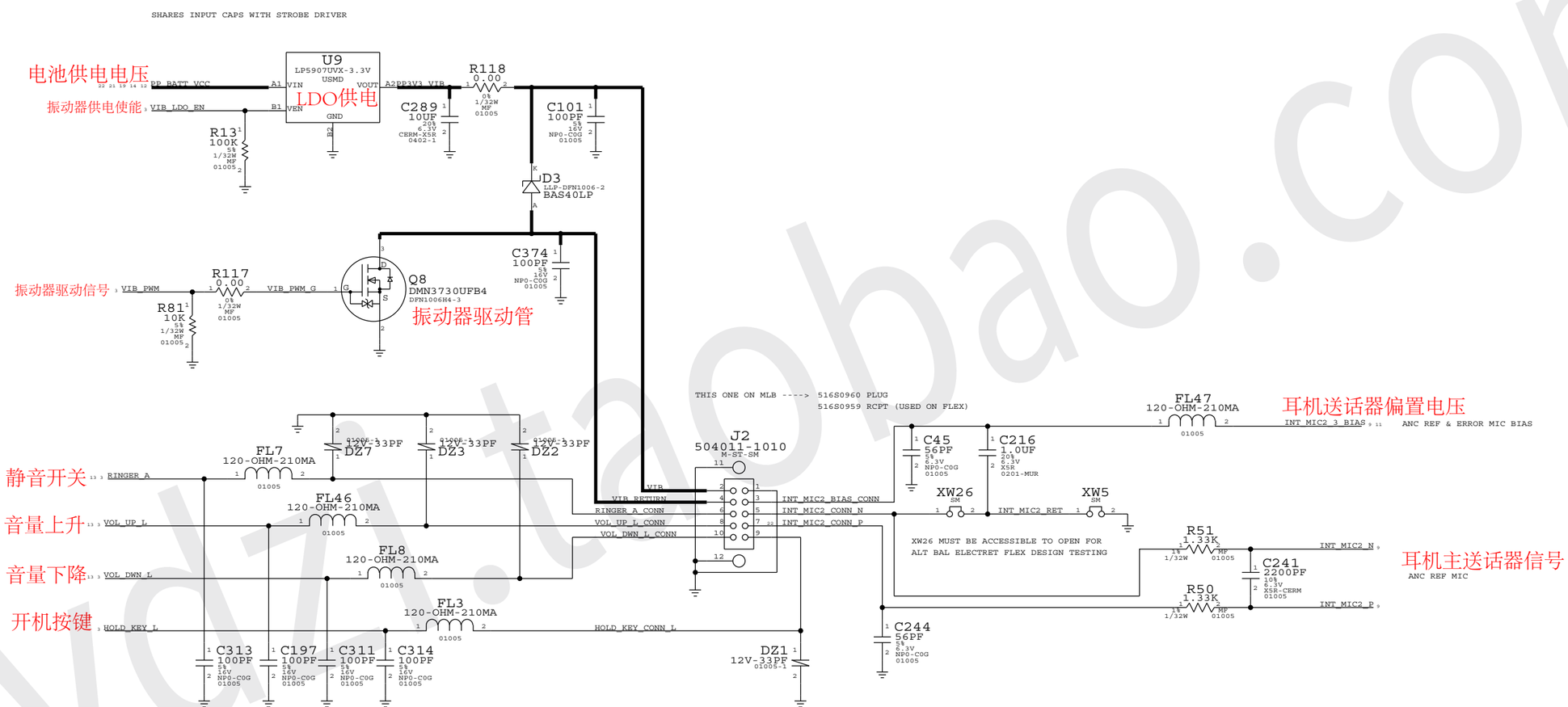

按键连接器电路

SYNC MASTER=N/A	SYNC DATE=N/A
PAGE TITLE: BUTTON CONNECTOR	
Apple Inc.	DRAWING NUMBER: 051-9113 SIZE: D
	REVISION: 11.0.0
NOTICE OF PROPRIETARY PROPERTY: THE INFORMATION CONTAINED HEREIN IS THE PROPRIETARY PROPERTY OF APPLE INC. THE POSESSOR AGREES TO THE FOLLOWING: I TO MAINTAIN THIS DOCUMENT IN CONFIDENCE II NOT TO REPRODUCE OR COPY IT III NOT TO REVEAL OR PUBLISH IT IN WHOLE OR PART IV ALL RIGHTS RESERVED	BRANCH
	PAGE: 8 OF 24
	SHEET: 8 OF 51

思源电子 sydzi.taobao.com 为您提供维修手机.笔记本.电脑图纸

CS42L65 AUDIO CODEC

音频编解码电路

sydzi.taobao.com
思源电子为您服务！
QQ: 2356146104

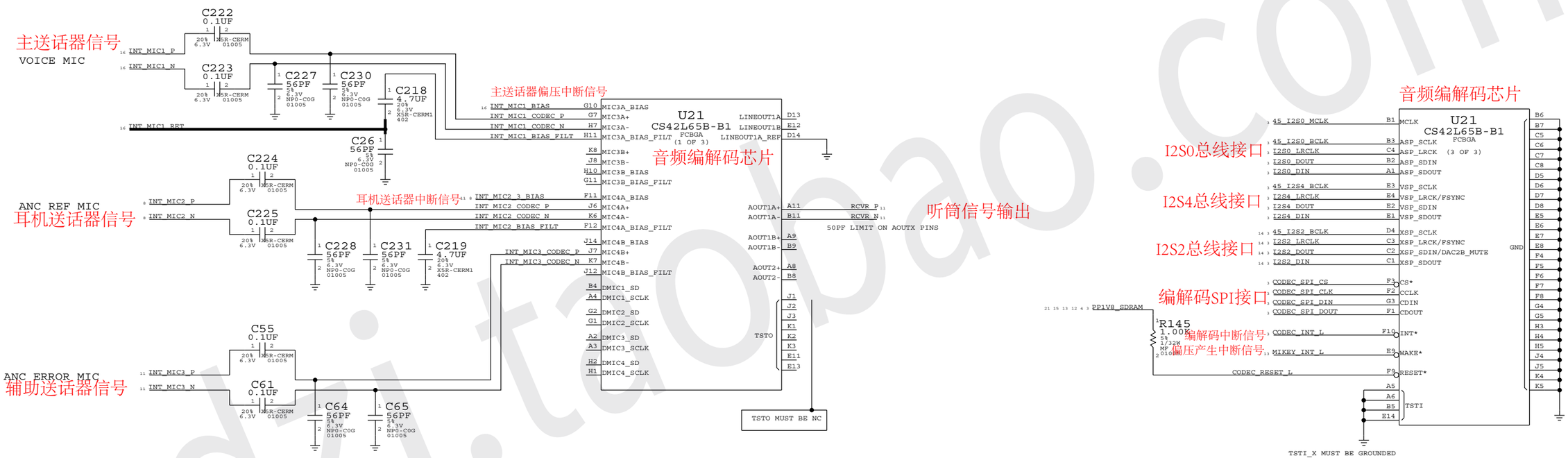

音频编解码电路

SYNC MASTER=N/A	SYNC DATE=N/A
PAGE TITLE: CS42L65 AUDIO CODEC (1/2)	
Apple Inc.	DRAWING NUMBER 051-9113 / SIZE D
	REVISION 11.0.0
NOTICE OF PROPRIETARY PROPERTY: THE INFORMATION CONTAINED HEREIN IS THE PROPRIETARY PROPERTY OF APPLE INC. THE POSESSOR AGREES TO THE FOLLOWING: I TO MAINTAIN THIS DOCUMENT IN CONFIDENCE II NOT TO REPRODUCE OR COPY IT III NOT TO REVEAL OR PUBLISH IT IN WHOLE OR PART IV ALL RIGHTS RESERVED	BRANCH
	PAGE 9 OF 24
	SHEET 9 OF 51

思源电子 sydzi.taobao.com 为您提供维修手机.笔记本.电脑图纸

CS42L65 AUDIO CODEC

音频编解码电路

sydzi.taobao.com
思源电子为您服务！
QQ: 2356146104

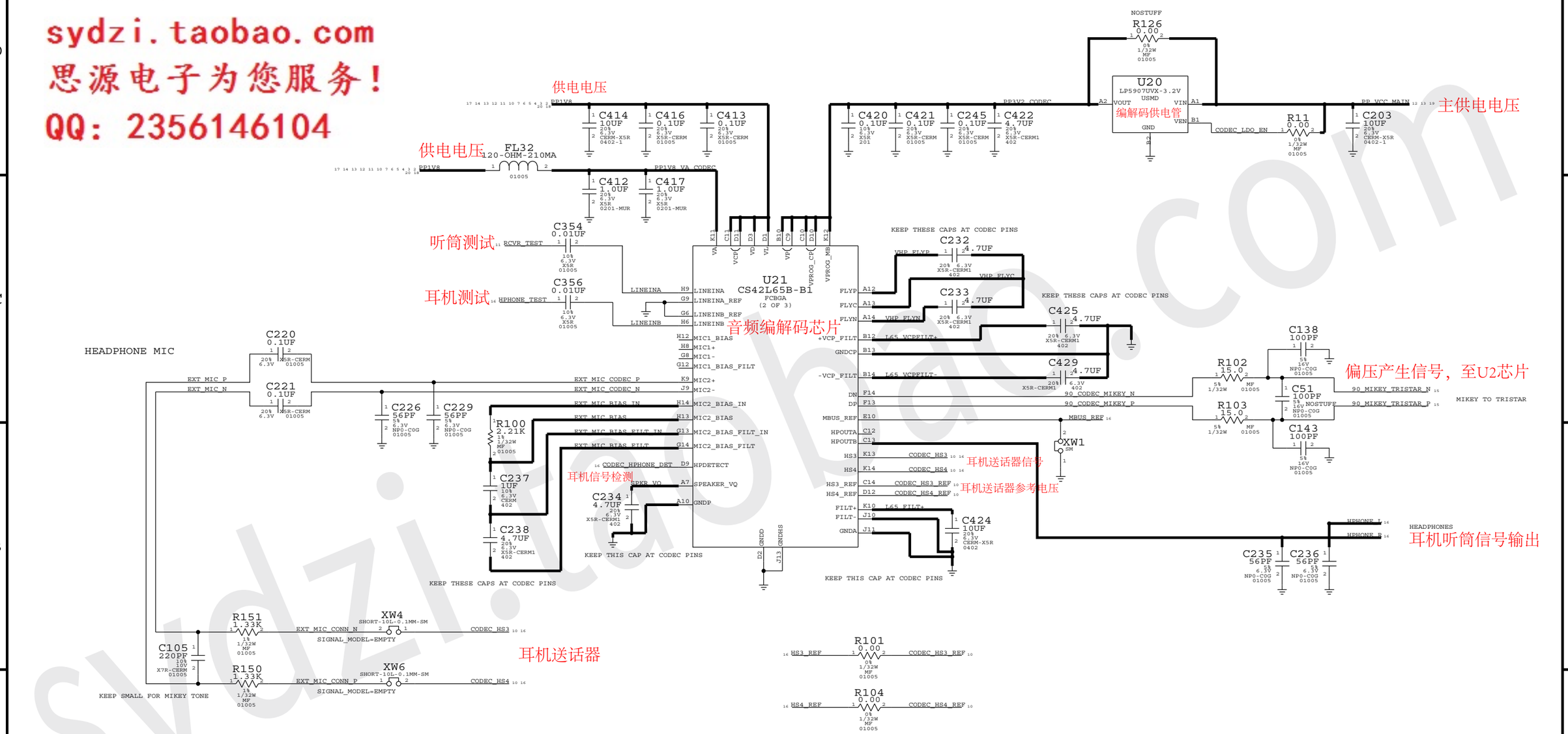

音频编解码电路

SYNC MASTER=N/A	SYNC DATE=N/A
PAGE TITLE: CS42L65 AUDIO CODEC (2/2)	
Apple Inc.	DRAWING NUMBER: 051-9113 SIZE: D
	REVISION: 11.0.0
NOTICE OF PROPRIETARY PROPERTY: THE INFORMATION CONTAINED HEREIN IS THE PROPRIETARY PROPERTY OF APPLE INC. THE POSESSOR AGREES TO THE FOLLOWING: I TO MAINTAIN THIS DOCUMENT IN CONFIDENCE II NOT TO REPRODUCE OR COPY IT III NOT TO REVEAL OR PUBLISH IT IN WHOLE OR PART IV ALL RIGHTS RESERVED	BRANCH
	PAGE: 10 OF 24
	SHEET: 10 OF 51

思源电子 sydzi.taobao.com 为您提供维修手机.笔记本.电脑图纸

思源电子 sydzi.taobao.com 为您提供维修手机.笔记本.电脑图纸

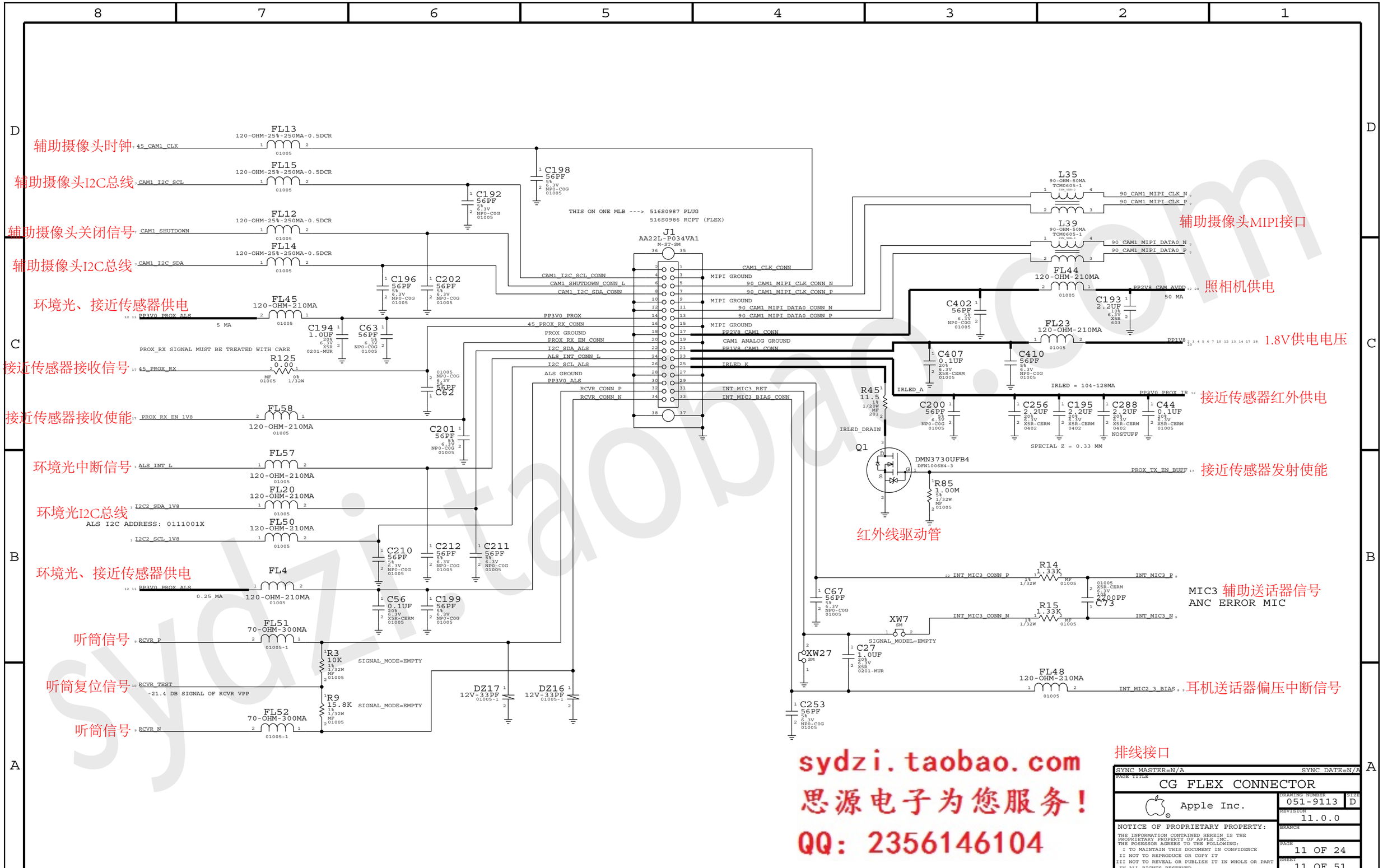

sydzi.taobao.com
思源电子为您服务！
QQ: 2356146104

思源电子 sydzi.taobao.com 为您提供维修手机.笔记本.电脑图纸

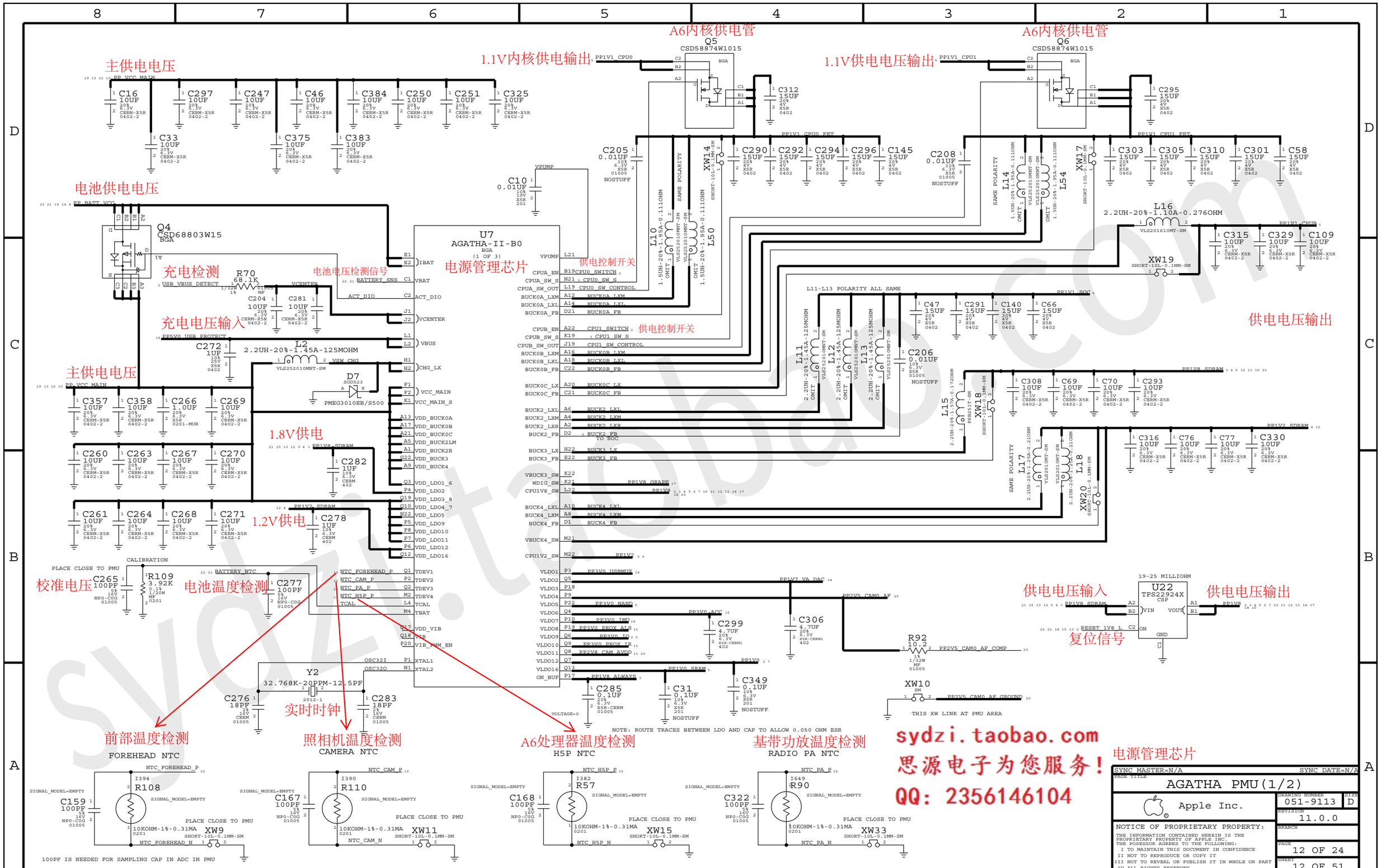

思源电子 sydzi.taobao.com 为您提供维修手机.笔记本.电脑图纸

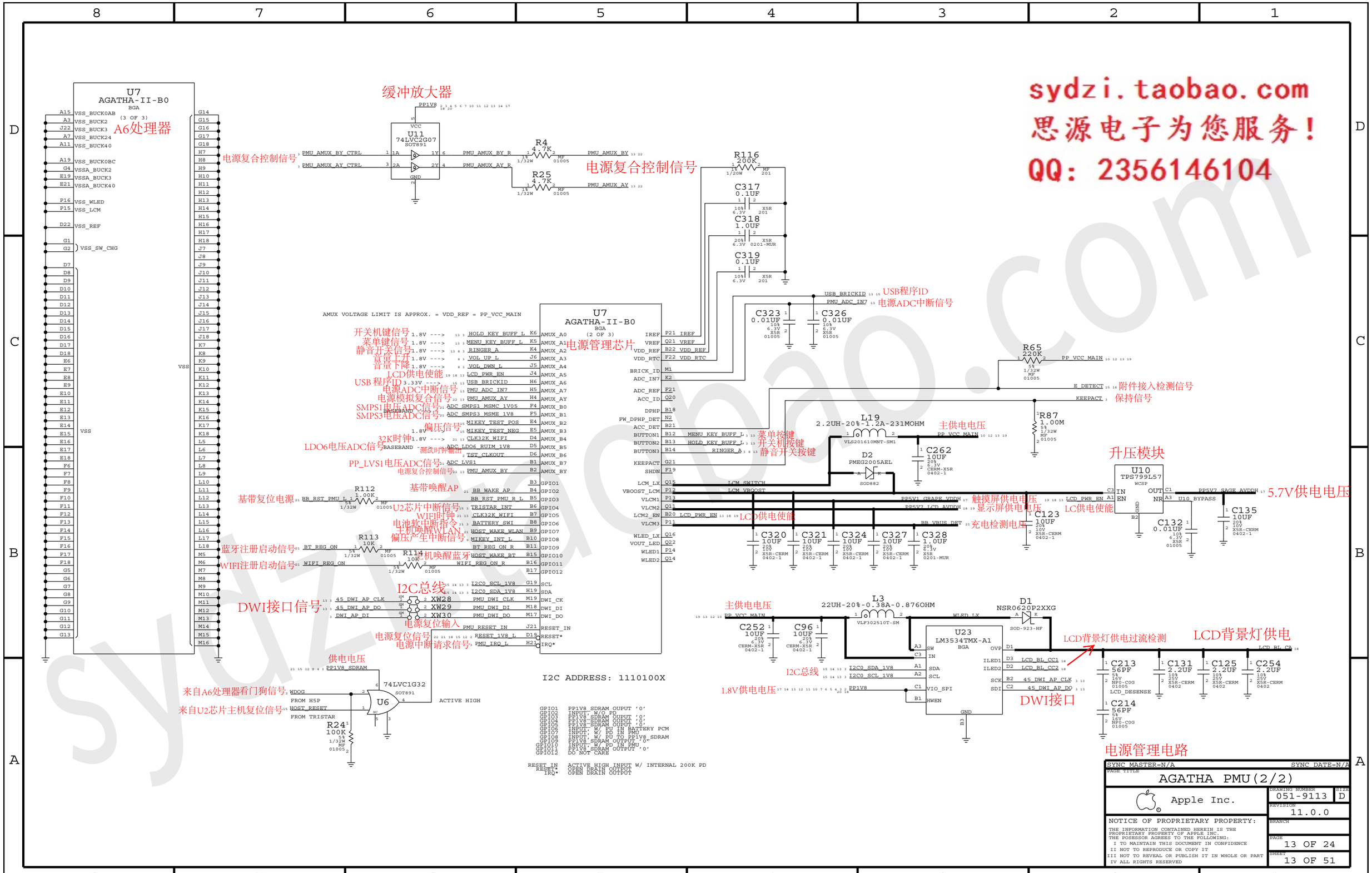

思源电子 sydzi.taobao.com 为您提供维修手机.笔记本.电脑图纸

SPEAKER AMP

I2C ADDRESS: 1000000X

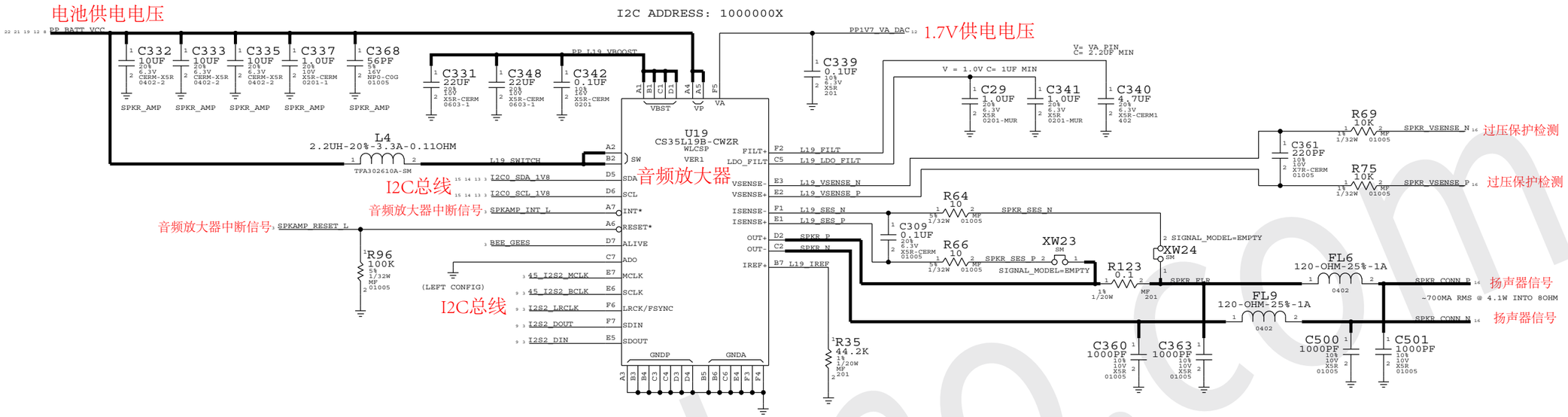

THESE PARTS OUTSIDE OF SHIELD

ACCELEROMETER

I2C ADDRESS: 0011101X

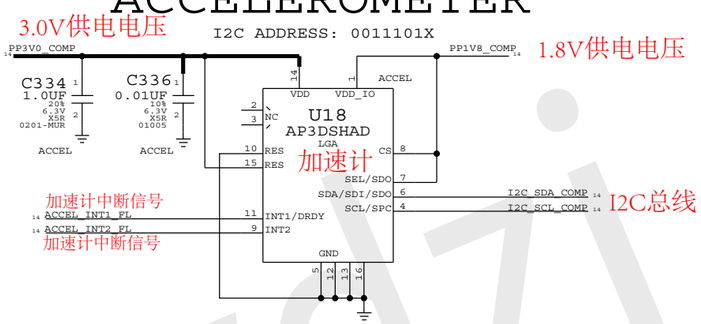

COMPASS2

I2C ADDR: 0001100X

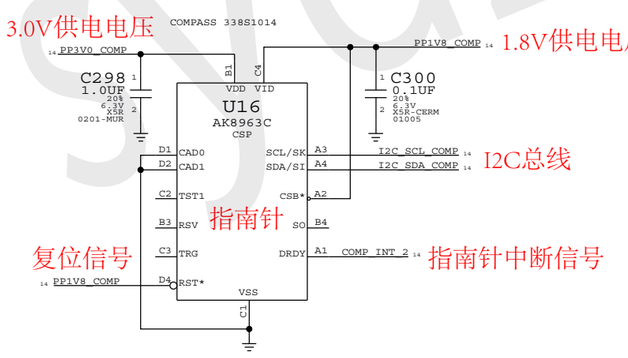

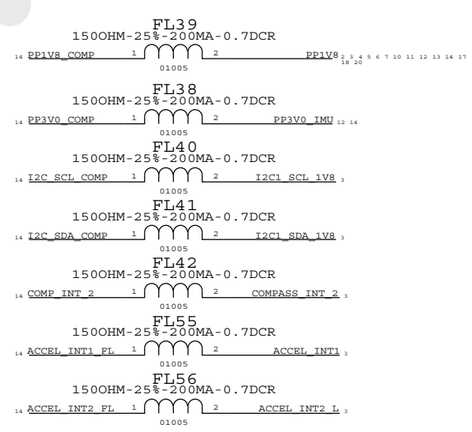

GYRO 20KHZ

I2C ADDRESS: 1101010X

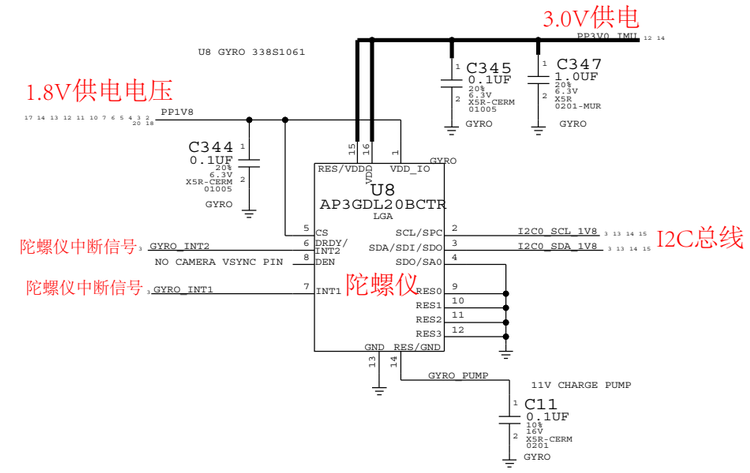

sydzi.taobao.com
思源电子为您服务！
QQ: 2356146104

加速计、陀螺仪、指南针、音频放大器

SYNC MASTER=N/A	SYNC DATE=N/A
PAGE TITLE: ACCEL,GYRO,COMPASS,SPK AMP	
Apple Inc.	DRAWING NUMBER: 051-9113 SIZE: D
	REVISION: 11.0.0
NOTICE OF PROPRIETARY PROPERTY: THE INFORMATION CONTAINED HEREIN IS THE PROPRIETARY PROPERTY OF APPLE INC. THE POSESSOR AGREES TO THE FOLLOWING: I TO MAINTAIN THIS DOCUMENT IN CONFIDENCE II NOT TO REPRODUCE OR COPY IT III NOT TO REVEAL OR PUBLISH IT IN WHOLE OR PART IV ALL RIGHTS RESERVED	BRANCH
	PAGE: 14 OF 24
	SHEET: 14 OF 51

思源电子 sydzi.taobao.com 为您提供维修手机.笔记本.电脑图纸

思源电子 sydzi.taobao.com 为您提供维修手机.笔记本.电脑图纸

TRISTAR

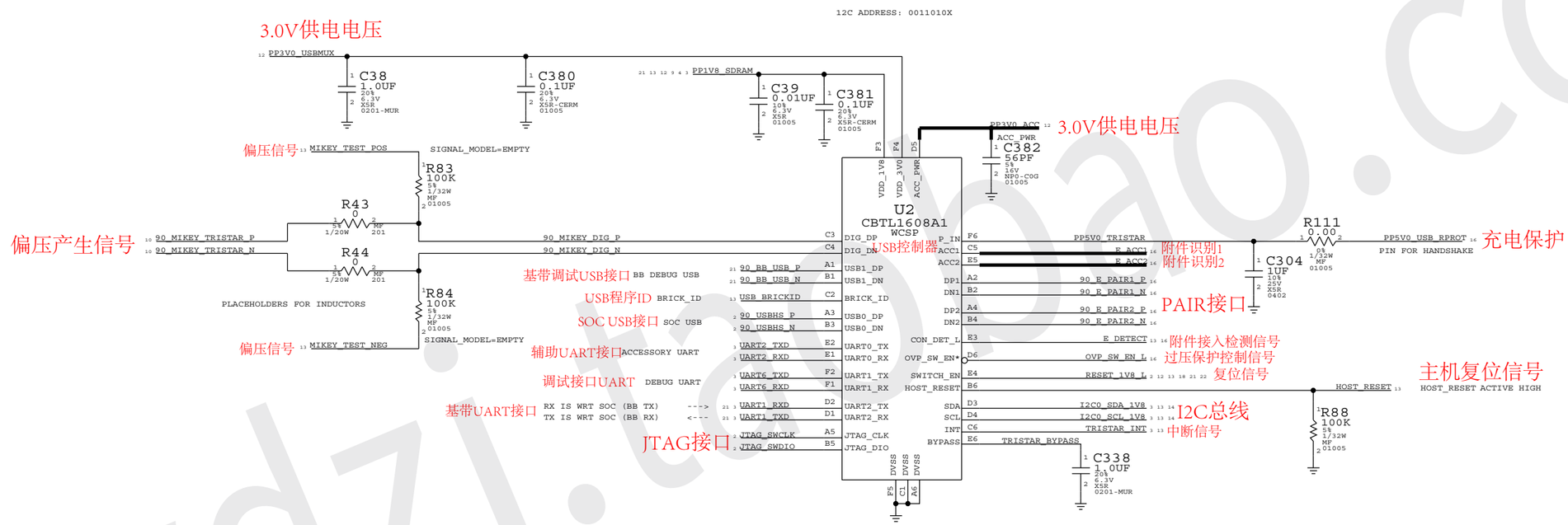

sydzi.taobao.com
思源电子为您服务！
QQ: 2356146104

SYNC MASTER=N/A SYNC DATE=N/A

PAGE TITLE: TRISTAR

Apple Inc.

DRAWING NUMBER: 051-9113 SIZE: D

REVISION: 11.0.0

BRANCH:

PAGE: 15 OF 24

SHEET: 15 OF 51

NOTICE OF PROPRIETARY PROPERTY:
THE INFORMATION CONTAINED HEREIN IS THE PROPRIETARY PROPERTY OF APPLE INC.
THE POSESSOR AGREES TO THE FOLLOWING:
I TO MAINTAIN THIS DOCUMENT IN CONFIDENCE
II NOT TO REPRODUCE OR COPY IT
III NOT TO REVEAL OR PUBLISH IT IN WHOLE OR PART
IV ALL RIGHTS RESERVED

思源电子 sydzi.taobao.com 为您提供维修手机.笔记本.电脑图纸

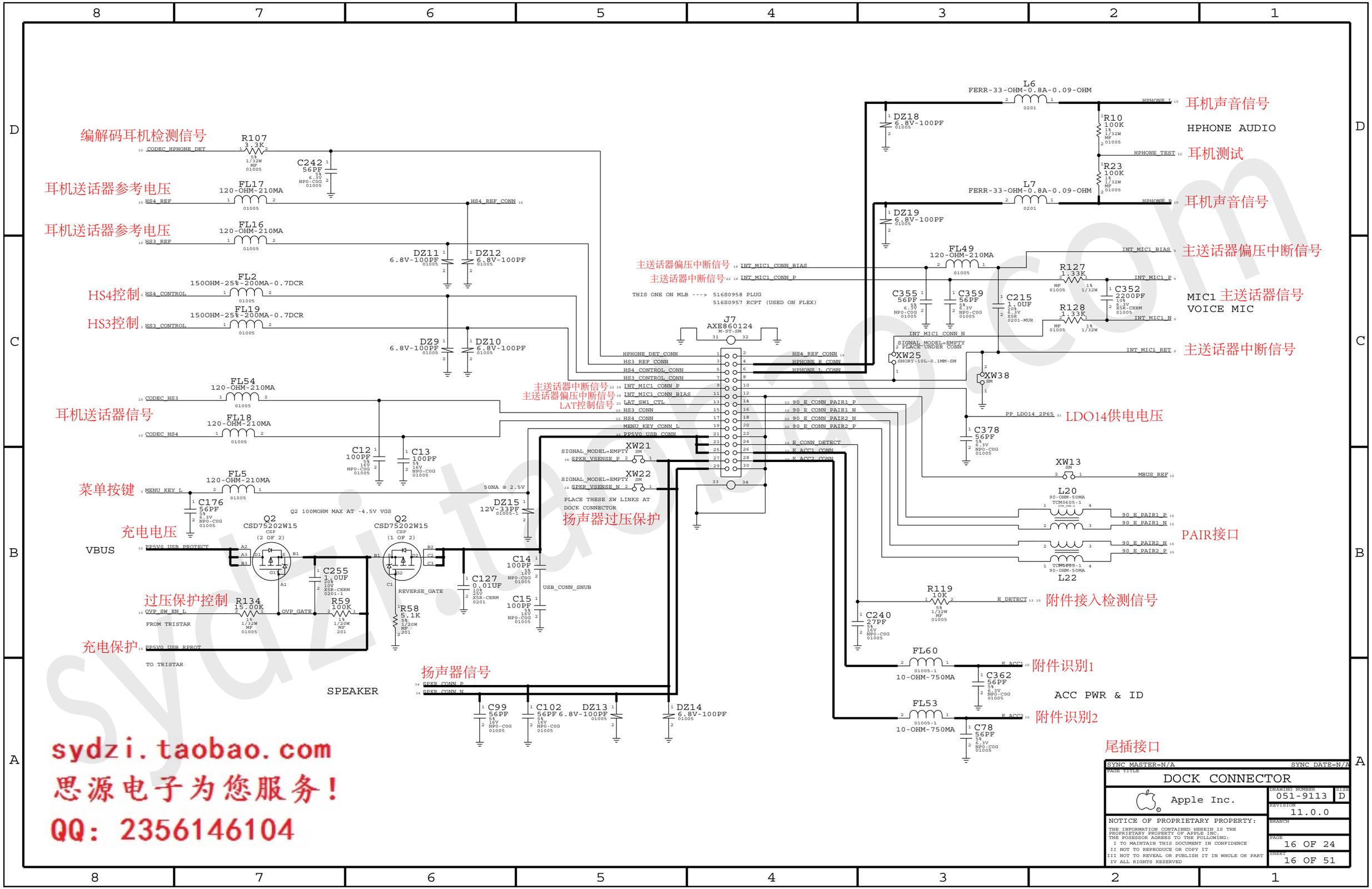

sydzi.taobao.com
思源电子为您服务！
QQ: 2356146104

思源电子 sydzi.taobao.com 为您提供维修手机.笔记本.电脑图纸

sydzi.taobao.com
思源电子为您服务！
QQ: 2356146104

SAGE2 B0

CUMULUS C0

343S0574

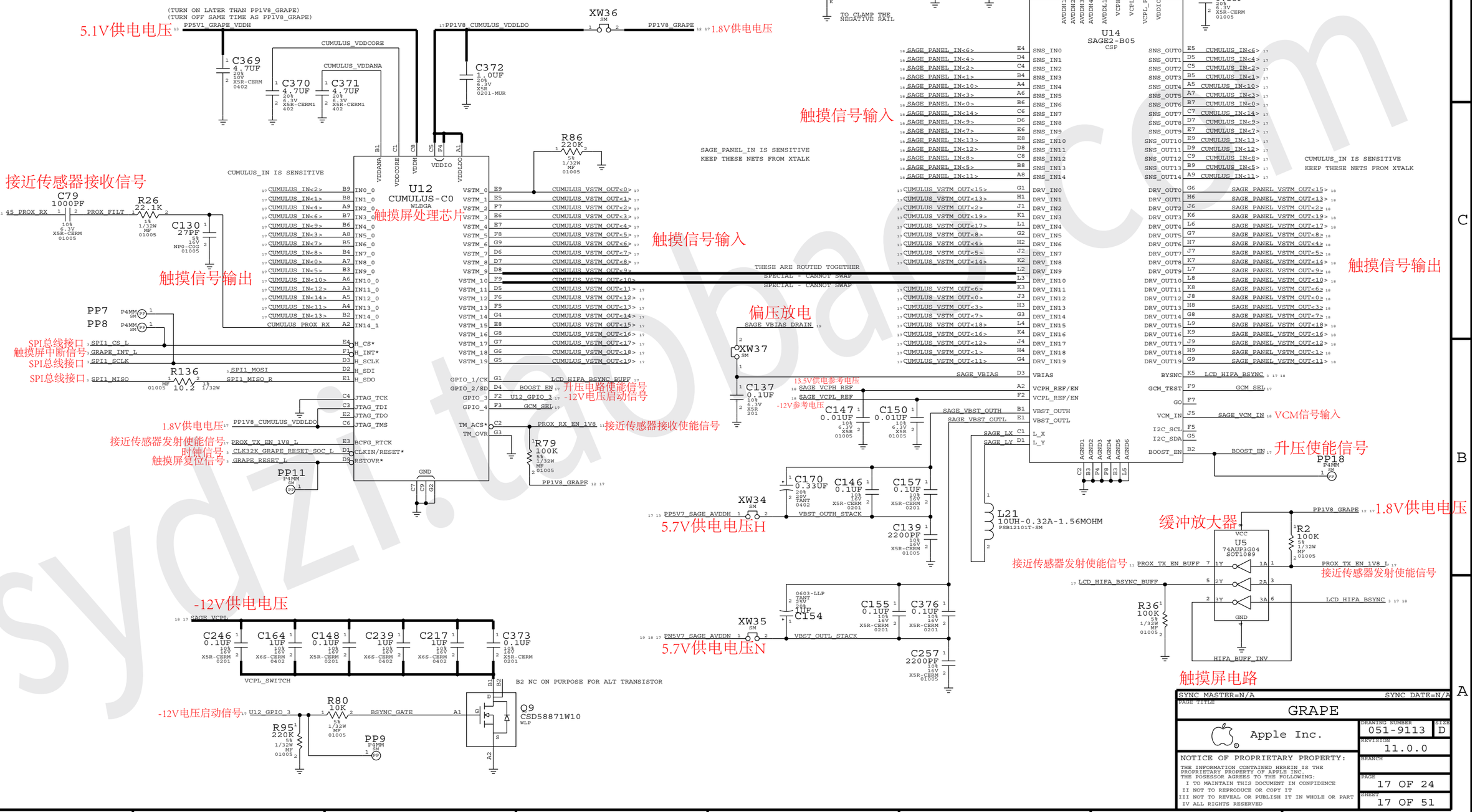

SYNC MASTER=N/A SYNC DATE=N/A

PAGE TITLE: GRAPE

Apple Inc.

DRAWING NUMBER: 051-9113 SIZE: D

REVISION: 11.0.0

BRANCH:

PAGE: 17 OF 24

SHEET: 17 OF 51

NOTICE OF PROPRIETARY PROPERTY:
THE INFORMATION CONTAINED HEREIN IS THE PROPRIETARY PROPERTY OF APPLE INC.
THE POSESSOR AGREES TO THE FOLLOWING:
I TO MAINTAIN THIS DOCUMENT IN CONFIDENCE
II NOT TO REPRODUCE OR COPY IT
III NOT TO REVEAL OR PUBLISH IT IN WHOLE OR PART
IV ALL RIGHTS RESERVED

思源电子 sydzi.taobao.com 为您提供维修手机.笔记本.电脑图纸

MIPI联盟，即移动产业处理器接口（Mobile Industry Processor Interface 简称MIPI）联盟，2003年7月，由美国德州仪器（TI）、意法半导体（ST）、英国ARM和芬兰诺基亚（Nokia）4家公司共同成立，旨在定义并推广用于移动应用处理器接口的开放标准。MIPI（移动产业处理器接口）是MIPI联盟发起的为移动应用处理器制定的开放标准。

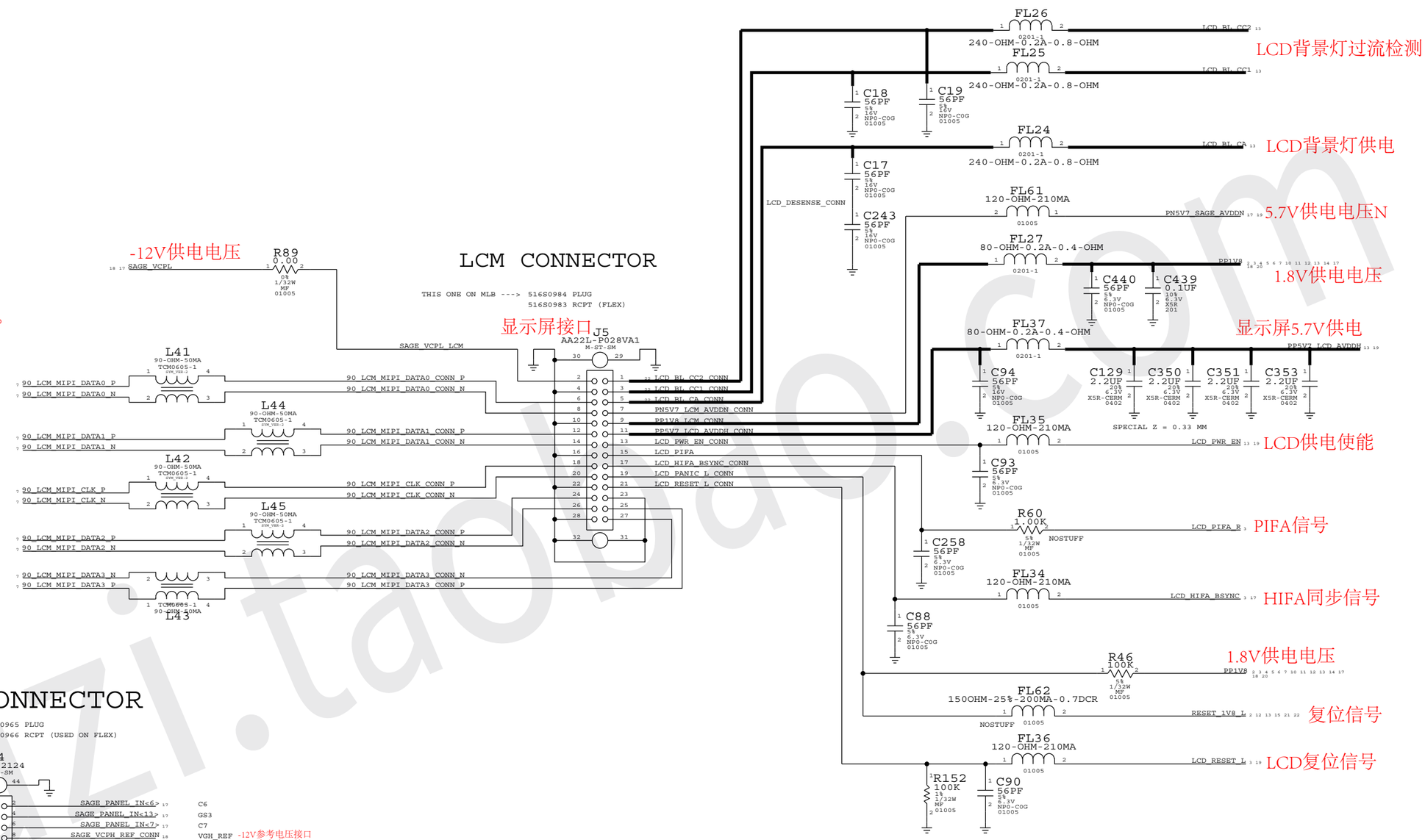

sydzi.taobao.com
思源电子为您服务！
QQ: 2356146104

思源电子 sydzi.taobao.com 为您提供维修手机.笔记本.电脑图纸

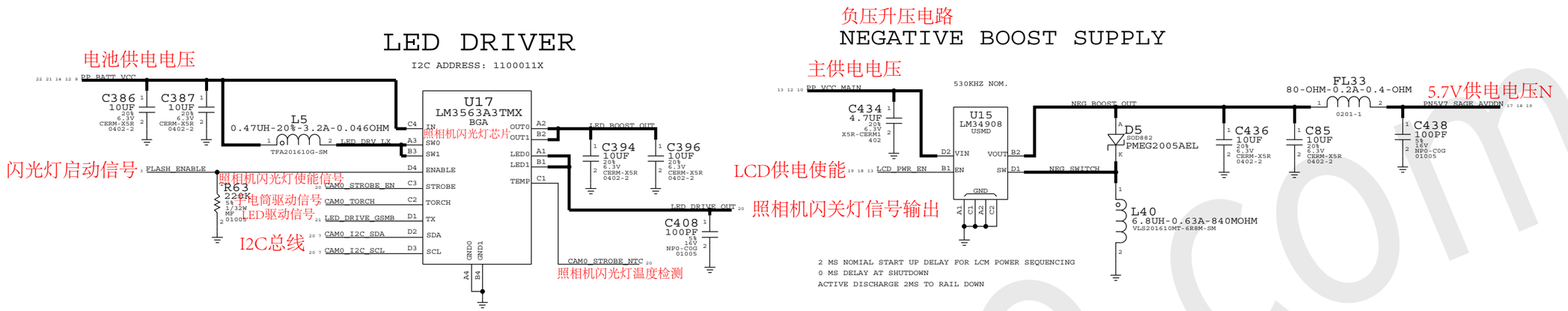

sydzi.taobao.com
思源电子为您服务!
QQ: 2356146104

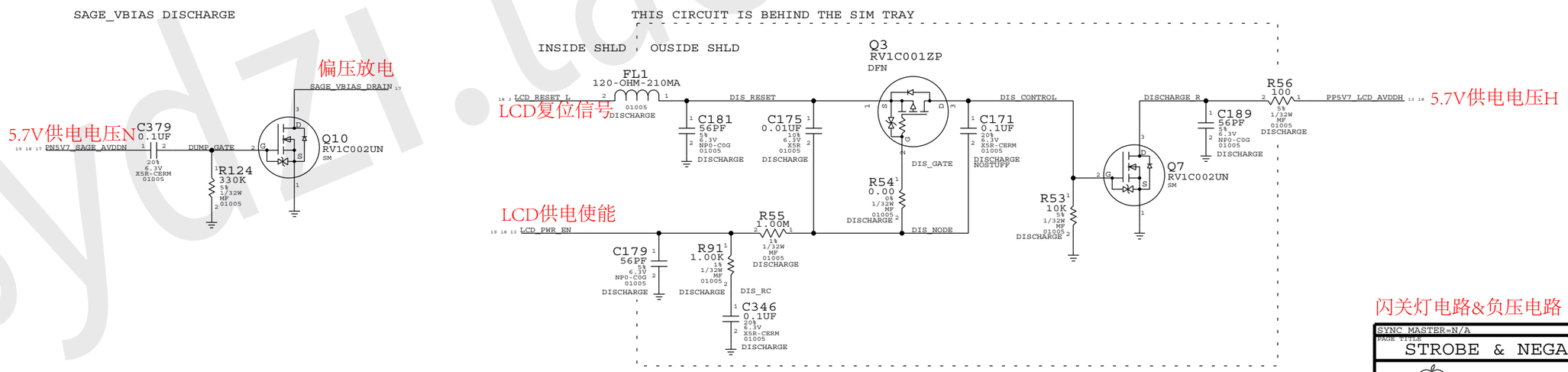

闪关灯电路&负压电路

SYNC MASTER=N/A	SYNC DATE=N/A
PAGE TITLE: STROBE & NEGATIVE RAIL	
Apple Inc.	DRAWING NUMBER 051-9113 SIZE D
	REVISION 11.0.0
NOTICE OF PROPRIETARY PROPERTY: THE INFORMATION CONTAINED HEREIN IS THE PROPRIETARY PROPERTY OF APPLE INC. THE POSESSOR AGREES TO THE FOLLOWING: I TO MAINTAIN THIS DOCUMENT IN CONFIDENCE II NOT TO REPRODUCE OR COPY IT III NOT TO REVEAL OR PUBLISH IT IN WHOLE OR PART IV ALL RIGHTS RESERVED	BRANCH
	PAGE 19 OF 24
	SHEET 19 OF 51

思源电子 sydzi.taobao.com 为您提供维修手机.笔记本.电脑图纸

sydzi.taobao.com
思源电子为您服务！
QQ: 2356146104

照相机接口

CAM0: MAIN CAMERA CONNECTOR

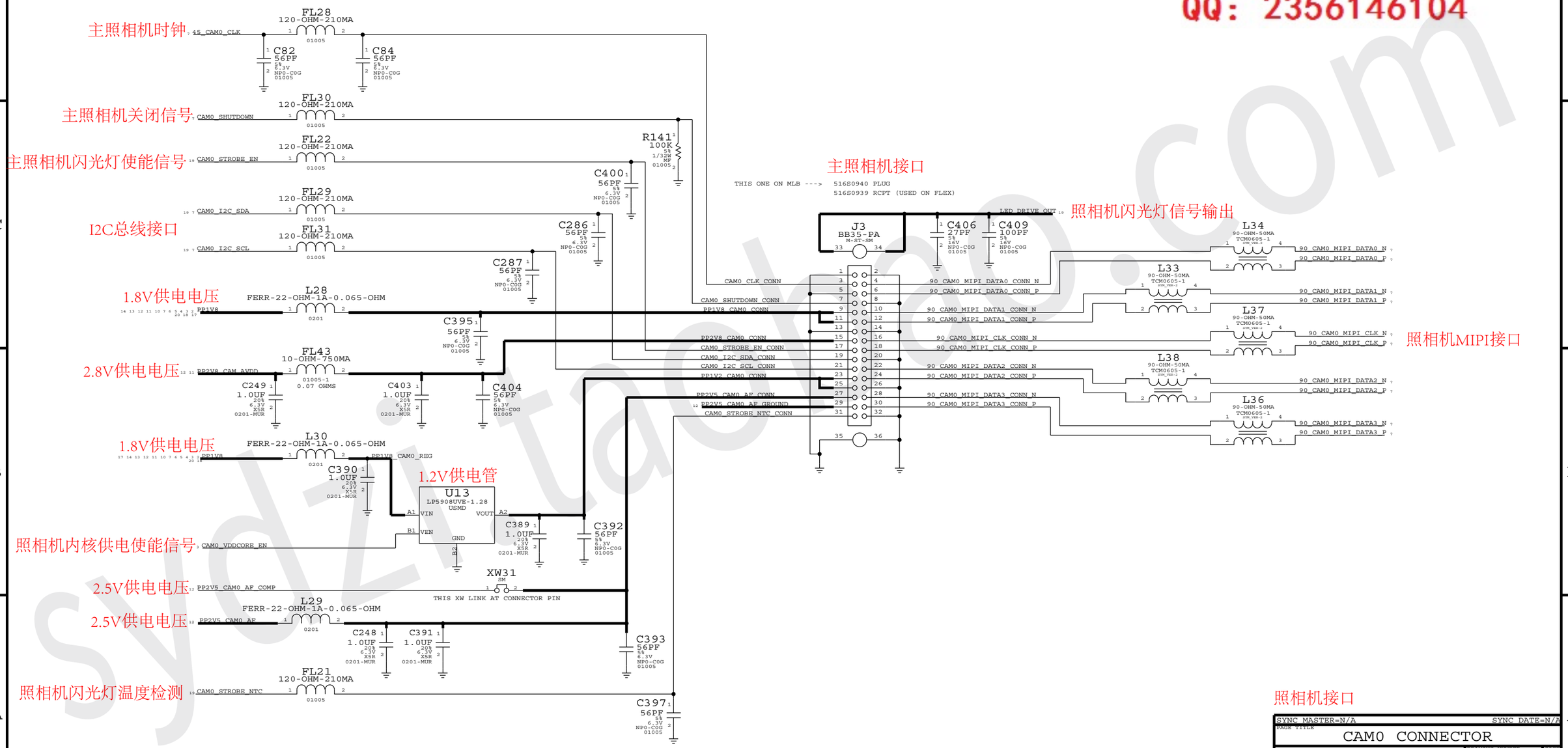

照相机接口

SYNC MASTER=N/A	SYNC DATE=N/A
PAGE TITLE: CAM0 CONNECTOR	
Apple Inc.	DRAWING NUMBER: 051-9113 SIZE: D
	REVISION: 11.0.0
NOTICE OF PROPRIETARY PROPERTY: THE INFORMATION CONTAINED HEREIN IS THE PROPRIETARY PROPERTY OF APPLE INC. THE POSESSOR AGREES TO THE FOLLOWING: I TO MAINTAIN THIS DOCUMENT IN CONFIDENCE II NOT TO REPRODUCE OR COPY IT III NOT TO REVEAL OR PUBLISH IT IN WHOLE OR PART IV ALL RIGHTS RESERVED	BRANCH
	PAGE: 20 OF 24
	SHEET: 20 OF 51

思源电子 sydzi.taobao.com 为您提供维修手机.笔记本.电脑图纸

思源电子 sydzi.taobao.com 为您提供维修手机.笔记本.电脑图纸

BATTERY CONN

THIS ONE ON MLB ---> 516S0906 RCPT
516S0907 PLUG (USED ON BATTERY PCM)

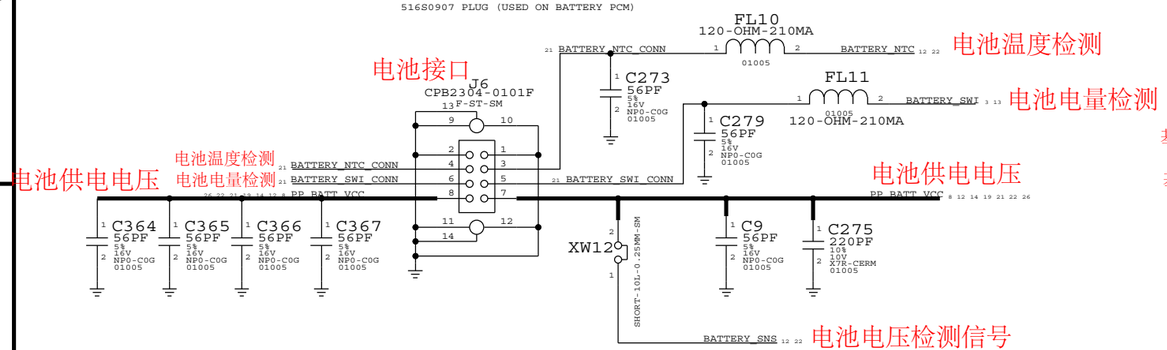

FIDUCIALS

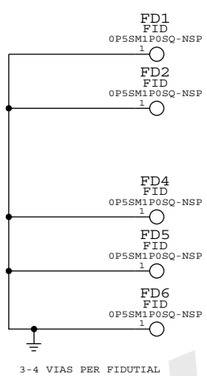

STANDOFFS

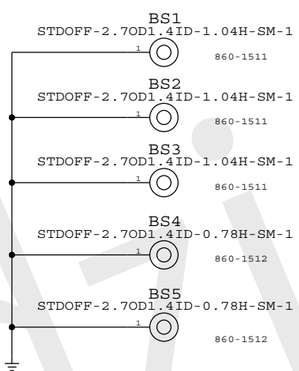

SHIELDS

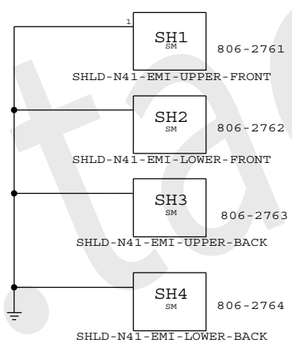

UPPER COWLING CLIP/HOOK

AP/基带接口
AP/RADIO INTERFACE

sydzi.taobao.com
思源电子为您服务！
QQ: 2356146104

电池接口&RF接口PP

SYNC MASTER=N/A	SYNC DATE=N/A
PAGE TITLE: BATTERY & RF INT.	
Apple Inc.	DRAWING NUMBER 051-9113 SIZE D
	REVISION 11.0.0
NOTICE OF PROPRIETARY PROPERTY: THE INFORMATION CONTAINED HEREIN IS THE PROPRIETARY PROPERTY OF APPLE INC. THE POSESSOR AGREES TO THE FOLLOWING: I TO MAINTAIN THIS DOCUMENT IN CONFIDENCE II NOT TO REPRODUCE OR COPY IT III NOT TO REVEAL OR PUBLISH IT IN WHOLE OR PART IV ALL RIGHTS RESERVED	BRANCH
	PAGE 21 OF 24
	SHEET 21 OF 51

思源电子 sydzi.taobao.com 为您提供维修手机.笔记本.电脑图纸

电源部分测试点

POWER TP

PP5V0_USB_CONN (充电电压接口)	TP1 (TP-P6)	VBUS	
	TP2 (TP-P6)	POWER GROUND	
PP_BATT_VCC (电池供电电压)	TP3 (TP-P6)	VBAT	
BATTERY_SNS (电池电压检测信号)	TP4 (TP-P6)	BATTERY SNS	
BATTERY_NTC (电池温度测试)	TP5 (TP-P6)	BATTERY NTC	

电源复合模拟信号测试点

SUPER TP

PMU_AMUX_AY	TP6 (TP-P6)	ANALOG MUX A OUTPUT
PMU_AMUX_BY	TP7 (TP-P6)	ANALOG MUX B OUTPUT

复位信号测试点

RESET

RESET_1V8_L (复位信号)	TP8 (TP-P6)	H5P & BB RESET

DFU测试点

DFU

FORCE_DFU (强制DFU模式)	TP9 (TP-P6)	FORCE DFU

送话器音频测试点

MIC AUDIO

INT_MIC1_CONN_P	TP15 (TP-P6)	MIC1 POSITIVE	主送话器
INT_MIC2_CONN_P	TP16 (TP-P6)	MIC2 POSITIVE	耳机送话器
INT_MIC3_CONN_P	TP17 (TP-P6)	MIC3 POSITIVE	辅助送话器

DRIVE MIC WRT NEAREST GROUND TEST POINT

耳机送话器测试点

HEADPHONE MIC

HS3_CONN	TP28 (TP-P6)	HEADPHONE MIC NEG
HS4_CONN	TP29 (TP-P6)	HEADPHONE MIC POS

显示屏背光源测试点

LCM BACKLIGHT

LCD_BL_CC1_CONN	TP18 (TP-P6)	LCD BACKLIGHT SINK1
LCD_BL_CC2_CONN	TP19 (TP-P6)	LCD BACKLIGHT SINK2
LCD_BL_CA_CONN	TP20 (TP-P6)	LCD BACKLIGHT SOURCE

E75 - USB/UART/ID/POWER

90_E_CONN_PAIR1_P	TP21 (TP-P55)	
90_E_CONN_PAIR1_N	TP22 (TP-P55)	
90_E_CONN_PAIR2_P	TP23 (TP-P55)	
90_E_CONN_PAIR2_N	TP24 (TP-P55)	
E_ACC1_CONN (附件识别1)	TP26 (TP-P6)	ACCESSORY ID AND POWER
E_ACC2_CONN (附件识别2)	TP27 (TP-P6)	
	TP25 (TP-P6)	POWER GROUND
	TP32 (TP-P6)	POWER GROUND
E_CONN_DETECT (附件接入检测) — R94 10K 5% 1/32W MF 01005 — E_CONN_TP	TP10 (TP-P6)	FOR DIAGS

sydzi.taobao.com
思源电子为您服务！
QQ: 2356146104

测试点

SYNC MASTER=N/A SYNC DATE=N/A

PAGE TITLE: TEST POINTS

Apple Inc.

DRAWING NUMBER: 051-9113 SIZE: D

REVISION: 11.0.0

BRANCH:

PAGE: 22 OF 24

SHEET: 22 OF 51

NOTICE OF PROPRIETARY PROPERTY:
THE INFORMATION CONTAINED HEREIN IS THE PROPRIETARY PROPERTY OF APPLE INC.
THE POSESSOR AGREES TO THE FOLLOWING:
I TO MAINTAIN THIS DOCUMENT IN CONFIDENCE
II NOT TO REPRODUCE OR COPY IT
III NOT TO REVEAL OR PUBLISH IT IN WHOLE OR PART
IV ALL RIGHTS RESERVED

思源电子 sydzi.taobao.com 为您提供维修手机.笔记本.电脑图纸

RADIO BOM OPTIONS

CONFIDENTIAL AND PROPRIETARY APPLE SYSTEM DESIGN. FOR REFERENCE PURPOSES ONLY - NOT A CHANGE REQUEST.

HW_ID PA_ID BOM OPTIONS

PART#	QTY	DESCRIPTION	REFERENCE DESIGNATOR(S)	CRITICAL	BOM OPTION
118S0685	1	PA_ID RES DIVIDER	R304_RF	Y	B4_17
118S0656	1	PA_ID RES DIVIDER	R304_RF	Y	B3_13
118S0719	1	PA_ID RES DIVIDER	R302_RF	Y	B4_17
118S0685	1	PA_ID RES DIVIDER	R302_RF	Y	B3_13

SPI NOR BOM OPTIONS

PART#	QTY	DESCRIPTION	REFERENCE DESIGNATOR(S)	CRITICAL	BOM OPTION
335S0874	1	SERIAL SPI NOR - MICRONIX	U601_RF	Y	B4_17
335S0874	1	SERIAL SPI NOR - MICRONIX	U601_RF	Y	B3_13

B5/B5E BOM OPTIONS

PART#	QTY	DESCRIPTION	REFERENCE DESIGNATOR(S)	CRITICAL	BOM OPTION
353S3415	1	SKY77487 BAND 5/8 PAD	U1001_RF	Y	B4_17
353S3568	1	SKY77491 BAND5E/8 PAD	U1001_RF	Y	B3_13
155S0552	1	BAND5 TX SAW	FL1001_RF	Y	B4_17
155S0742	1	BAND5/BC10 TX SAW	FL1001_RF	Y	B3_13
152S1563	1	1.5NH, INDUCTOR - MURATA	L1001_RF	Y	B4_17
152S1662	1	1.5NH, INDUCTOR - TDK	L1001_RF	Y	B3_13
152S1577	1	15NH, INDUCTOR - MURATA	L1002_RF	Y	B4_17
152S1665	1	15NH, INDUCTOR - TDK	L1002_RF	Y	B3_13
152S1576	1	12NH, INDUCTOR - MURATA	L1003_RF	Y	B4_17
152S1664	1	12NH, INDUCTOR - TDK	L1003_RF	Y	B3_13
152S1570	1	4.7NH, INDUCTOR - MURATA	L1010_RF	Y	B4_17
152S1663	1	4.7NH, INDUCTOR - TDK	L1010_RF	Y	B3_13

B13/17 BOM OPTIONS

PART#	QTY	DESCRIPTION	REFERENCE DESIGNATOR(S)	CRITICAL	BOM OPTION
152S1328	1	4.3NH INDUCTOR - 0201	C1111_RF	Y	B4_17
152S1353	1	3.6NH INDUCTOR - 0201	C1111_RF	Y	B3_13
131S0198	1	1.8PF CAPACITOR - 0201	L1103_RF	Y	B4_17
118S0724	1	0 OHM JUMPER - 0201	C1112_RF	Y	B4_17
131S0204	1	22PF CAPACITOR - 0201	C1112_RF	Y	B3_13
118S0724	1	0 OHM JUMPER - 0201	L1105_RF	Y	B4_17
152S1443	1	2.0NH INDUCTOR - 0201	L1105_RF	Y	B3_13
152S1320	1	7.5NH INDUCTOR - 0201	C1113_RF	Y	B4_17
131S0166	1	39PF CAPACITOR - 0201	C1113_RF	Y	B3_13
131S0176	1	2.4PF CAPACITOR - 0201	C1117_RF	Y	B4_17

DCDC BOM OPTIONS

PART#	QTY	DESCRIPTION	REFERENCE DESIGNATOR(S)	CRITICAL	BOM OPTION
152S1648	1	POWER INDUCTOR - TAIYO YUDEN	L1201_RF	Y	B4_17
152S1648	1	POWER INDUCTOR - TAIYO YUDEN	L1201_RF	Y	B3_13
152S1570	1	4.7NH, INDUCTOR - MURATA	L1205_RF	Y	B4_17
152S1663	1	4.7NH, INDUCTOR - TDK	L1205_RF	Y	B3_13

WIFI BOM OPTIONS

PART#	QTY	DESCRIPTION	REFERENCE DESIGNATOR(S)	CRITICAL	BOM OPTION
339S0171	1	WIFI MODULE - MURATA	U1801_RF	Y	B4_17
339S0171	1	WIFI MODULE - MURATA	U1801_RF	Y	B3_13

sydzi.taobao.com
思源电子为您服务!
QQ: 2356146104

SINGING CAP BOM OPTIONS

NEED TO COPY FROM AP TABLE
WHEN STAN FINISHES

B13/17 BOM OPTIONS

PART#	QTY	DESCRIPTION	REFERENCE DESIGNATOR(S)	CRITICAL	BOM OPTION
155S0620	1	BAND17 TX SAW	FL1101_RF	Y	B4_17
155S0619	1	BAND13 TX SAW	FL1101_RF	Y	B3_13
353S3567	1	BAND17 PAM - SKYWORKS	U1101_RF	Y	B4_17
353S3441	1	BAND13 PAM - AVAGO	U1101_RF	Y	B3_13
155S0709	1	BAND17 DUPLEXER - MURATA	U1102_RF	Y	B4_17
155S0738	1	BAND13 DUPLEXER - EPCOS	U1102_RF	Y	B3_13
152S1336	1	BAND17 INDUCTOR - 8.2NH	L1104_RF	Y	B4_17
152S1342	1	BAND13 INDUCTOR - 15NH	L1104_RF	Y	B3_13
152S1577	1	15NH, INDUCTOR - MURATA	L1102_RF	Y	B4_17
152S1576	1	12NH, INDUCTOR - MURATA	L1102_RF	Y	B3_13

B2 PAD BOM OPTIONS

PART#	QTY	DESCRIPTION	REFERENCE DESIGNATOR(S)	CRITICAL	BOM OPTION
353S3715	1	TQM666084 B2 TQS PAD	U1501_RF	Y	B4_17
353S3459	1	TQM666083 B25 TQS PAD	U1501_RF	Y	B3_13

DIVERISTY MODULE BOM OPTIONS

PART#	QTY	DESCRIPTION	REFERENCE DESIGNATOR(S)	CRITICAL	BOM OPTION
353S3516	1	B17 MURATA DIVERSITY MODULE	U1601_RF	Y	B4_17
353S3562	1	B13/BC10 DIVERSITY MODULE	U1601_RF	Y	B3_13

B3/DCS1800 BOM OPTIONS

PART#	QTY	DESCRIPTION	REFERENCE DESIGNATOR(S)	CRITICAL	BOM OPTION
155S0596	1	DCS1800 RX FIL	FL1301_RF	Y	B4_17
155S0729	1	BAND3 RX FIL	FL1301_RF	Y	B3_13
155S0695	1	THRU LINE	FL1302_RF	Y	B4_17
155S0722	1	BAND13 TX LPF	FL1302_RF	Y	B3_13
152S1656	1	3.0NH INDUCTOR	R1301_RF	Y	B3_13
117S0161	1	0OHM RES	R1302_RF	Y	B4_17
118S0652	1	49.9OHM RES	R1303_RF	Y	B3_13
118S0652	1	49.9OHM RES	R1305_RF	Y	B4_17
152S1562	1	1.2NH INDUCTOR	L1304_RF	Y	B4_17
152S1720	1	1.8NH INDUCTOR	L1304_RF	Y	B3_13
152S1562	1	1.2NH INDUCTOR	L1305_RF	Y	B4_17
152S1720	1	1.8NH INDUCTOR	L1305_RF	Y	B3_13
152S1569	1	3.9NH INDUCTOR	L1301_RF	Y	B4_17
152S1570	1	4.7NH INDUCTOR	L1301_RF	Y	B3_13

B3/B4 RX BOM OPTIONS

PART#	QTY	DESCRIPTION	REFERENCE DESIGNATOR(S)	CRITICAL	BOM OPTION
152S1570	1	4.7NH INDUCTOR - 01005	C1414_RF	Y	B4_17
131S0375	1	1.0PF CAPACITOR - 01005	C1415_RF	Y	B4_17
131S0375	1	1.0PF CAPACITOR - 01005	C1420_RF	Y	B4_17
152S1570	1	4.7NH INDUCTOR - 01005	L1416_RF	Y	B4_17
152S1571	1	5.6NH INDUCTOR - 01005	C1414_RF	Y	B3_13
131S0377	1	1.2PF CAPACITOR - 01005	C1415_RF	Y	B3_13
131S0377	1	1.2PF CAPACITOR - 01005	C1420_RF	Y	B3_13
152S1571	1	5.6NH INDUCTOR - 01005	L1416_RF	Y	B3_13
131S0219	1	10PF CAPACITOR - 01005	L1420_RF	Y	B4_17
131S0219	1	10PF CAPACITOR - 01005	L1421_RF	Y	B4_17
152S1562	1	1.2NH INDUCTOR - 01005	L1420_RF	Y	B3_13
152S1562	1	1.2NH INDUCTOR - 01005	L1421_RF	Y	B3_13
152S1328	1	4.3NH INDUCTOR - 0201	R1402_RF	Y	B4_17
152S1688	1	3.5NH INDUCTOR - 0201	C1416_RF	Y	B4_17
152S1284	1	3.3NH INDUCTOR - 0201	R1402_RF	Y	B3_13
152S1284	1	3.3NH INDUCTOR - 0201	C1416_RF	Y	B3_13

B3/B4 TX BOM OPTIONS

PART#	QTY	DESCRIPTION	REFERENCE DESIGNATOR(S)	CRITICAL	BOM OPTION
131S0215	1	22PF CAPACITOR - 01005	L1417_RF	Y	B4_17
152S1569	1	3.9NH INDUCTOR - 01005	L1417_RF	Y	B3_13
131S0369	1	0.5PF CAPACITOR - 01005	L1408_RF	Y	B3_13
152S1284	1	3.3NH INDUCTOR - 0201	C1425_RF	Y	B4_17
152S1705	1	2.7NH INDUCTOR - 0201	L1419_RF	Y	B4_17
131S0551	1	1.2PF CAPACITOR - 0201	L1415_RF	Y	B4_17
152S1284	1	3.3NH INDUCTOR - 0201	C1425_RF	Y	B3_13
152S1705	1	2.7NH INDUCTOR - 0201	L1419_RF	Y	B3_13
131S0551	1	1.2PF CAPACITOR - 0201	L1415_RF	Y	B3_13

B3/B4 BOM OPTIONS

PART#	QTY	DESCRIPTION	REFERENCE DESIGNATOR(S)	CRITICAL	BOM OPTION
353S3255	1	B1/4 PAD - AVAGO	U1401_RF	Y	B4_17
353S3443	1	B1/3 PAD - AVAGO	U1401_RF	Y	B3_13
155S0590	1	B4 TX FIL	FL1402_RF	Y	B4_17
155S0712	1	B3 TX FIL	FL1402_RF	Y	B3_13

PAGE TITLE: ?

Apple Inc.

DRAWING NUMBER: 051-9113 SIZE: D

REVISION: 11.0.0

BRANCH

PAGE: 23 OF 24

SHEET: 23 OF 51

NOTICE OF PROPRIETARY PROPERTY:
THE INFORMATION CONTAINED HEREIN IS THE PROPRIETARY PROPERTY OF APPLE INC.
THE POSESSOR AGREES TO THE FOLLOWING:
I TO MAINTAIN THIS DOCUMENT IN CONFIDENCE
II NOT TO REPRODUCE OR COPY IT
III NOT TO REVEAL OR PUBLISH IT IN WHOLE OR PART
IV ALL RIGHTS RESERVED

思源电子 sydzi.taobao.com 为您提供维修手机.笔记本.电脑图纸

史蒂夫.乔布斯（1955-2011），
发明家、企业家、
美国苹果公司联合创办人、前行政总裁。
1976年乔布斯和朋友成立苹果电脑公司，
他陪伴了苹果公司数十年的起落与复兴，
先后领导和推出了麦金塔计算机、iMac、
iPod、iPhone等风靡全球亿万人的电子产品，
深刻地改变了现代通讯、娱乐乃至生活的方式。
2011年10月5日他因病逝世，享年56岁。
乔布斯是改变世界的天才，他凭敏锐的触觉
和过人的智慧，勇于变革，不断创新，引领
全球资讯科技和电子产品的潮流，把电脑和
电子产品变得简约化、平民化，让曾经是昂
贵稀罕的电子产品变为现代人生活的一部分。

sydzi.taobao.com
思源电子为您服务！
QQ：2356146104

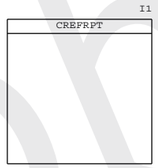

思源电子 sydzi.taobao.com 为您提供维修手机.笔记本.电脑图纸

1. ALL RESISTANCE VALUES ARE IN OHMS, 0.1 WATT +/- 5%.
2. ALL CAPACITANCE VALUES ARE IN MICROFARADS.
3. ALL CRYSTALS & OSCILLATOR VALUES ARE IN HERTZ.

REV	ECN	DESCRIPTION OF REVISION	CK APPD / DATE
11	0001447874	ENGINEERING RELEASED	2012-05-02

CONFIDENTIAL AND PROPRIETARY APPLE SYSTEM DESIGN. FOR REFERENCE PURPOSES ONLY - NOT A CHANGE REQUEST.

N41 RADIO_MLB SUBDESIGN
RADIO - 04/30/2012:SUBDESIGN

sydzi.taobao.com
思源电子为您服务！
QQ: 2356146104

PAGE CONTENTS

02	AP INTERFACE AND DEBUG CONNECTORS AP接口和调试连接器
03	BASEBAND PMU (1 OF 2) 基带电源
04	BASEBAND PMU (2 OF 2) 基带电源
05	BASEBAND (1 OF 2) 基带电路
06	BASEBAND (2 OF 2) & SERIAL EEPROM 基带&串行存储器
07	RF TRANSCEIVER (1 OF 3) 射频收发器
08	RF TRANSCEIVER SWITCHING NETWORKS (2 OF 3) 射频收发器开关部分
09	RF TRANSCEIVER DECOUPLING (3 OF 3) 射频收发器退偶电路
10	BAND 5/8 PAD 频段5、8功放电路
11	BAND 13 INTERSTAGE, PA, AND DUPLEXER 频段13功率匹配、功放、天线开关电路
12	2G PA, PA DCDC CONVERTER 2G功放，功放电路DCDC变换器
13	ASM, DCS RX 天线开关模块，DCS频段接收电路
14	BAND 1/4 PAD 频段1、4功放电路
15	BAND 2 PAD 频段2功放电路
16	RX DIVERSITY 接收分集电路
17	GPS GPS电路
18	WLAN/BT WLAN/蓝牙电路
19	BOM OPTION TABLES BOM选项表

PART#	QTY	DESCRIPTION	REFERENCE DESIGNATOR(S)	CRITICAL	BOM OPTION
051-9119	1	N41_RADIO_MLB	SCH	Y	
825-2029	1	EEE FOR 639-2482	EEEE_DNVM	Y	B4_17
825-2029	1	EEE FOR 639-3241	EEEE_DW3L	Y	B3_13

SCH #:051-9119
BOM (B4_17):639-2482
BOM (B3_13):639-3241

DRAWING TITLE: N41 RADIO_MLB V1

Apple Inc.

DRAWING NUMBER: 051-9113 SIZE: D
REVISION: 11.0.0
BRANCH:
PAGE: 1 OF 19
SHEET: 25 OF 51

NOTICE OF PROPRIETARY PROPERTY:
THE INFORMATION CONTAINED HEREIN IS THE PROPRIETARY PROPERTY OF APPLE INC.
THE POSESSOR AGREES TO THE FOLLOWING:
I TO MAINTAIN THIS DOCUMENT IN CONFIDENCE
II NOT TO REPRODUCE OR COPY IT
III NOT TO REVEAL OR PUBLISH IT IN WHOLE OR PART
IV ALL RIGHTS RESERVED

思源电子 sydzi.taobao.com 为您提供维修手机.笔记本.电脑图纸

AP INTERFACE & DEBUG CONNECTOR

CONFIDENTIAL AND PROPRIETARY APPLE SYSTEM DESIGN. FOR REFERENCE PURPOSES ONLY - NOT A CHANGE REQUEST.

电池供电电压 AP CONNECTIONS

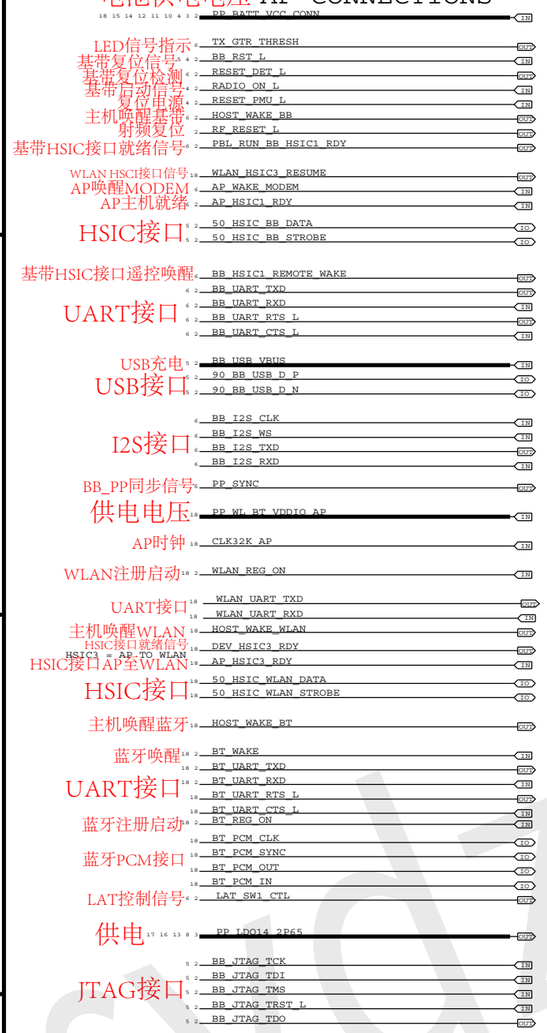

关键供电电压ADC检测信号

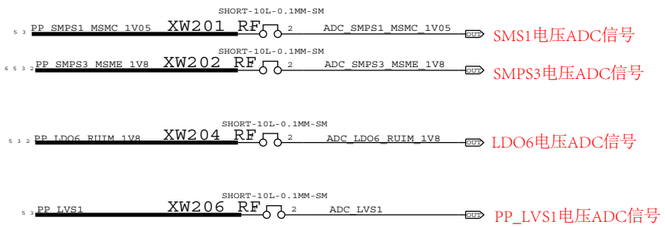

sydzi.taobao.com
思源电子为您服务！
QQ: 2356146104

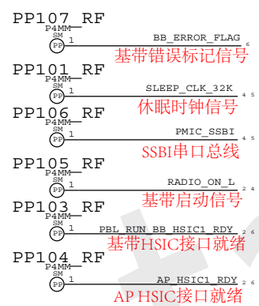

调试连接器 DEBUG CONNECTOR

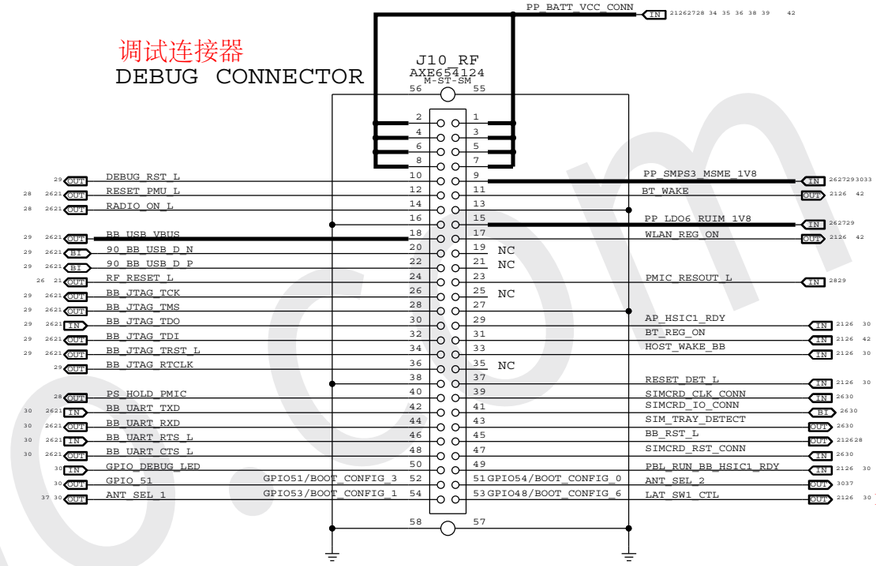

BOOT OPTIONS	BOOT_CONFIG SW REGISTER VALUE	GPIO/BOOT_CONFIG CONFIGURATION								
		47	48	49	50	51	52	53	54	55
BOOT_DEFAULT_OPTION	0X00	X	0	0	0	0	0	0	0	X
BOOT_NAND_OPTION	0X01	X	1	0	0	0	0	0	1	X
BOOT_HSIC_OPTION	0X02	X	1	0	0	0	0	1	0	X
BOOT_USB_OPTION	0X03	X	1	0	0	0	0	1	1	X
ENABLE SAHARA PROTOCOL	0X08	X	1	0	0	1	0	X	X	X

UART测试点 UART

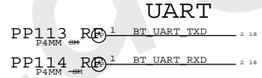

SIM卡接口 SIM CARD CONNECTOR

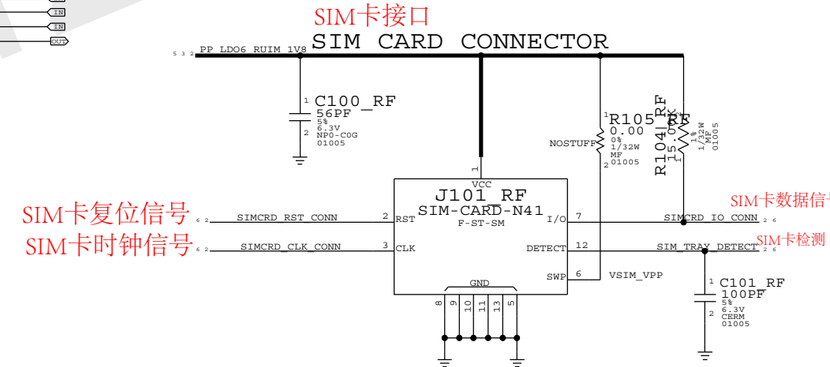

SIM卡保护组件

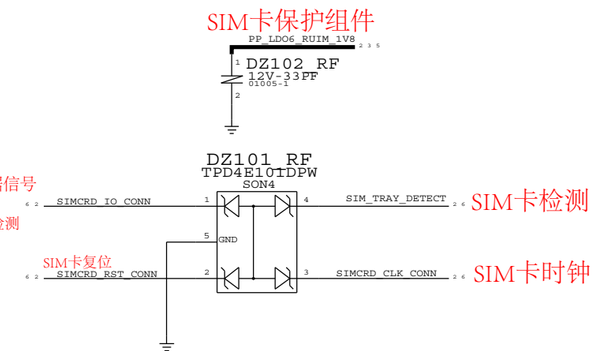

R R105
C C101
XWXW206
DZDZ101
U U101

系统&调试接口

PAGE TITLE	SYSTEM & DEBUG CONNECTORS
Apple Inc.	DRAWING NUMBER 051-9113 SIZE D
	REVISION 11.0.0
	BRANCH
	PAGE 2 OF 19
	SHEET 26 OF 51

NOTICE OF PROPRIETARY PROPERTY:
THE INFORMATION CONTAINED HEREIN IS THE PROPRIETARY PROPERTY OF APPLE INC.
THE POSESSOR AGREES TO THE FOLLOWING:
I TO MAINTAIN THIS DOCUMENT IN CONFIDENCE
II NOT TO REPRODUCE OR COPY IT
III NOT TO REVEAL OR PUBLISH IT IN WHOLE OR PART
IV ALL RIGHTS RESERVED

思源电子 sydzi.taobao.com 为您提供维修手机.笔记本.电脑图纸

BASEBAND PMU (1 OF 2)

基带电源

CONFIDENTIAL AND PROPRIETARY APPLE SYSTEM DESIGN. FOR REFERENCE PURPOSES ONLY - NOT A CHANGE REQUEST.

sydzi.taobao.com
思源电子为您服务!
QQ: 2356146104

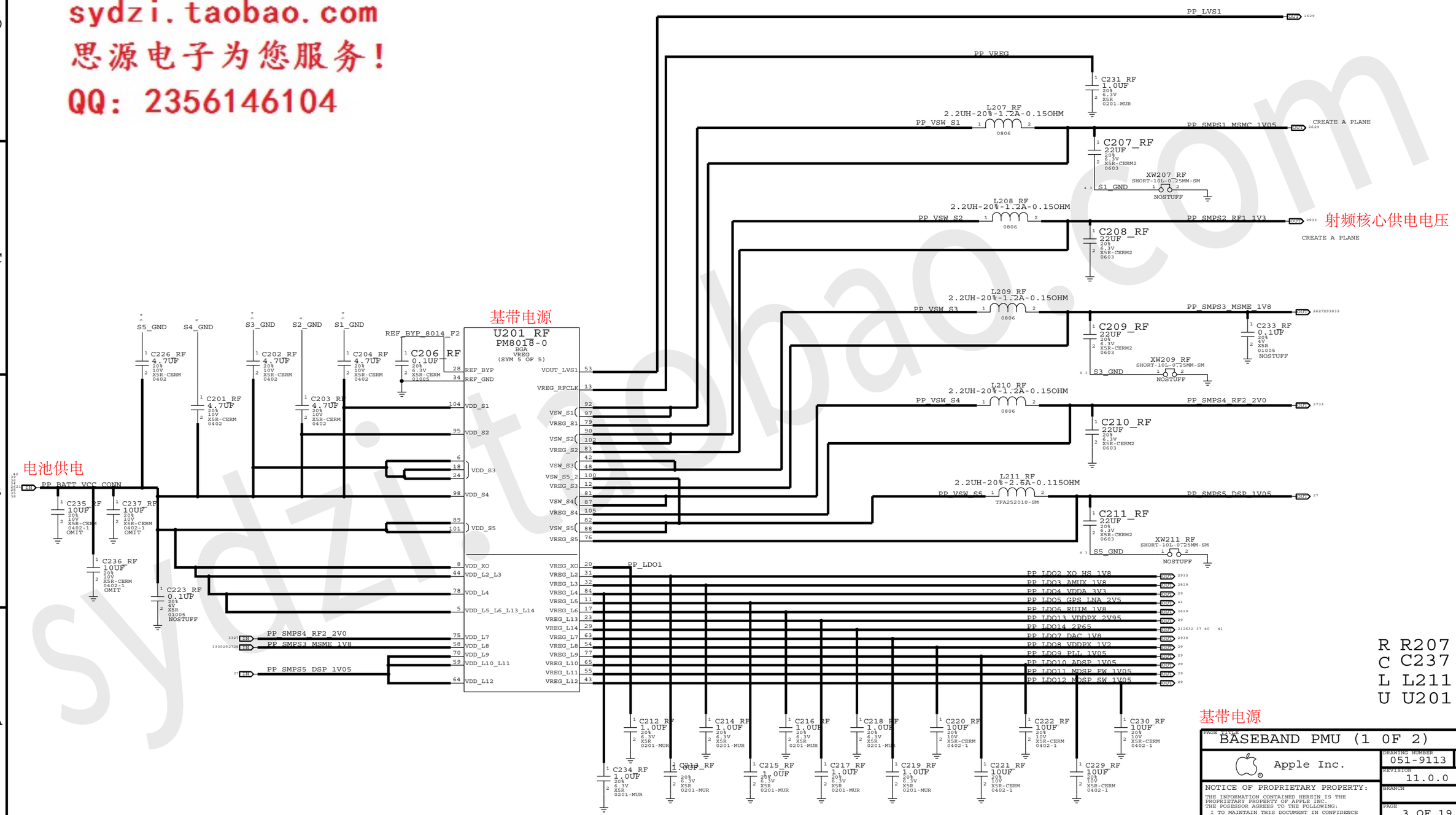

R R207
C C237
L L211
U U201

基带电源

PAGE TITLE	BASEBAND PMU (1 OF 2)
Apple Inc.	DRAWING NUMBER 051-9113 SIZE D
	REVISION 11.0.0
	BRANCH
	PAGE 3 OF 19
	SHEET 27 OF 51

NOTICE OF PROPRIETARY PROPERTY:
THE INFORMATION CONTAINED HEREIN IS THE PROPRIETARY PROPERTY OF APPLE INC.
THE POSESSOR AGREES TO THE FOLLOWING:
I TO MAINTAIN THIS DOCUMENT IN CONFIDENCE
II NOT TO REPRODUCE OR COPY IT
III NOT TO REVEAL OR PUBLISH IT IN WHOLE OR PART
IV ALL RIGHTS RESERVED

思源电子 sydzi.taobao.com 为您提供维修手机.笔记本.电脑图纸

BASEBAND PMU (2 OF 2)

CONFIDENTIAL AND PROPRIETARY APPLE SYSTEM DESIGN. FOR REFERENCE PURPOSES ONLY - NOT A CHANGE REQUEST.

基带电源

BOARD_ID	REVISION
0.25V : >0.2V && <0.4V	PROTO1
0.50V : >0.4V && <0.6V	PROTO2
0.70V : >0.6V && <0.8V	PROTO3
0.90V : >0.8V && <1.0V	EVT1
1.10V : >1.0V && <1.2V	EVT2
1.30V : >1.2V && <1.4V	EVT3

PA_ID	PA CONFIG
0.25V >0.2V && <0.4V	B4_17 MAIN
0.50V >0.4V && <0.6V	BUILD MATRIX
0.70V >0.6V && <0.8V	BUILD MATRIX
1.10V >1.0V && <1.2V	B3_13 MAIN
1.30V >1.2V && <1.4V	BUILD MATRIX
1.50V >1.4V && <1.6V	BUILD MATRIX

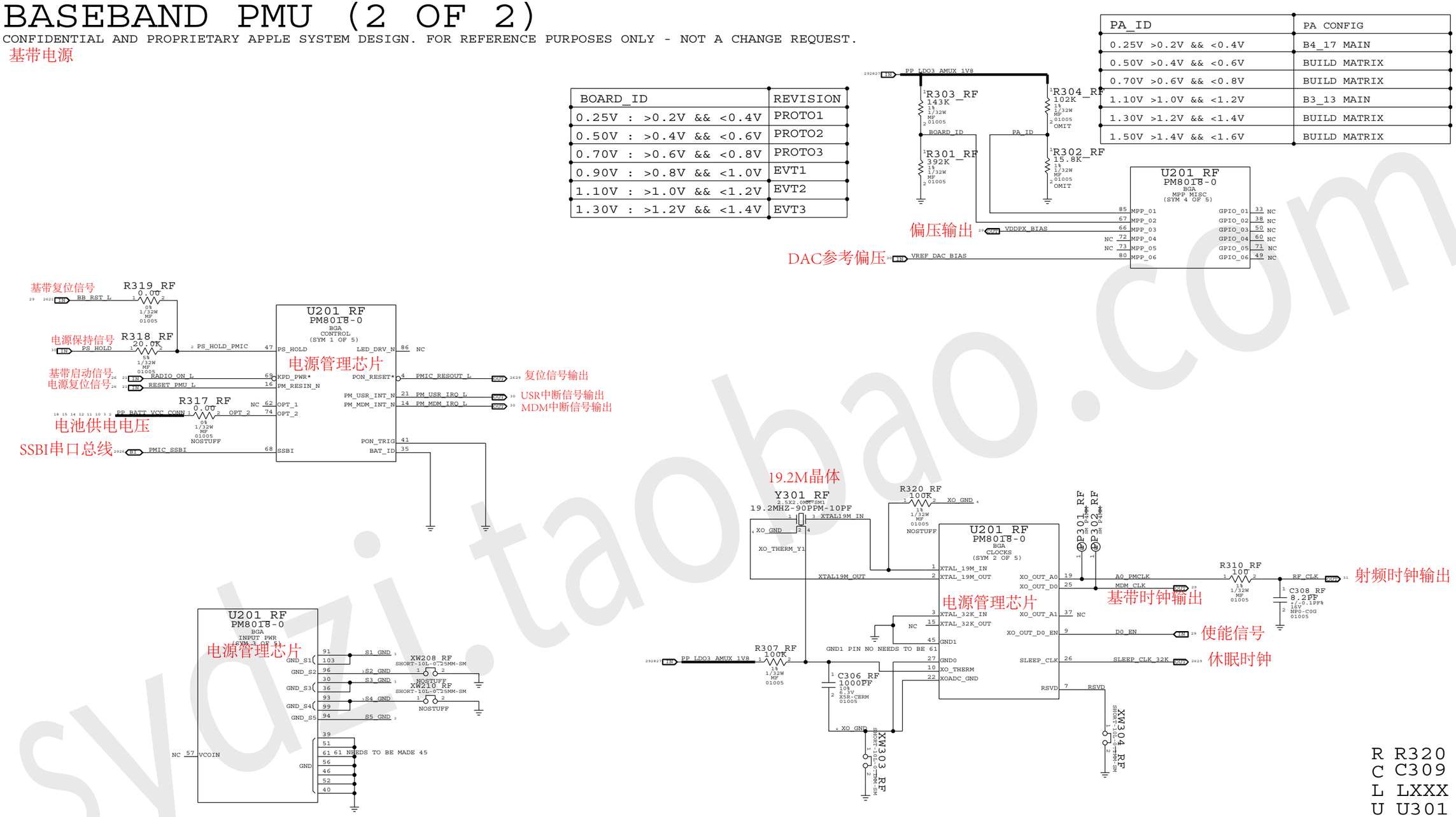

R R320
C C309
L LXXX
U U301
XW XW305

sydzi.taobao.com
思源电子为您服务！
QQ: 2356146104

基带电源

PAGE TITLE	BASEBAND PMU (2 OF 2)
Apple Inc.	DRAWING NUMBER 051-9113 SIZE D
	REVISION 11.0.0
NOTICE OF PROPRIETARY PROPERTY: THE INFORMATION CONTAINED HEREIN IS THE PROPRIETARY PROPERTY OF APPLE INC. THE POSESSOR AGREES TO THE FOLLOWING: I TO MAINTAIN THIS DOCUMENT IN CONFIDENCE II NOT TO REPRODUCE OR COPY IT III NOT TO REVEAL OR PUBLISH IT IN WHOLE OR PART IV ALL RIGHTS RESERVED	BRANCH
	PAGE 4 OF 19
	SHEET 28 OF 51

思源电子 sydzi.taobao.com 为您提供维修手机.笔记本.电脑图纸

BASEBAND (1 OF 2)

CONFIDENTIAL AND PROPRIETARY APPLE SYSTEM DESIGN. FOR REFERENCE PURPOSES ONLY - NOT A CHANGE REQUEST

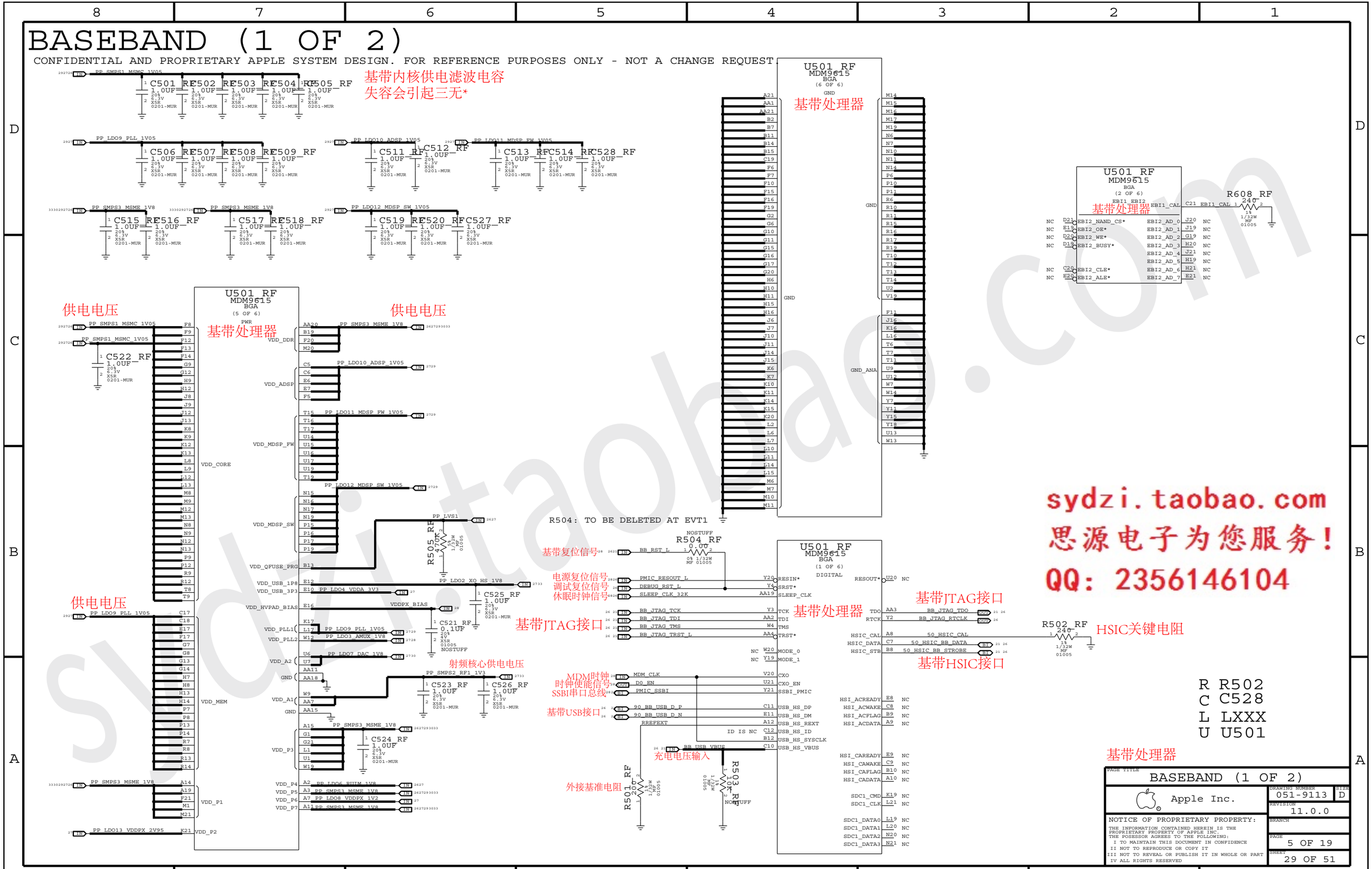

sydzi.taobao.com
思源电子为您服务！
QQ: 2356146104

思源电子 sydzi.taobao.com 为您提供维修手机.笔记本.电脑图纸

BASEBAND (2 OF 2)

CONFIDENTIAL AND PROPRIETARY APPLE SYSTEM DESIGN. FOR REFERENCE PURPOSES ONLY - NOT A CHANGE REQUEST.

sydzi.taobao.com
思源电子为您服务！
QQ: 2356146104

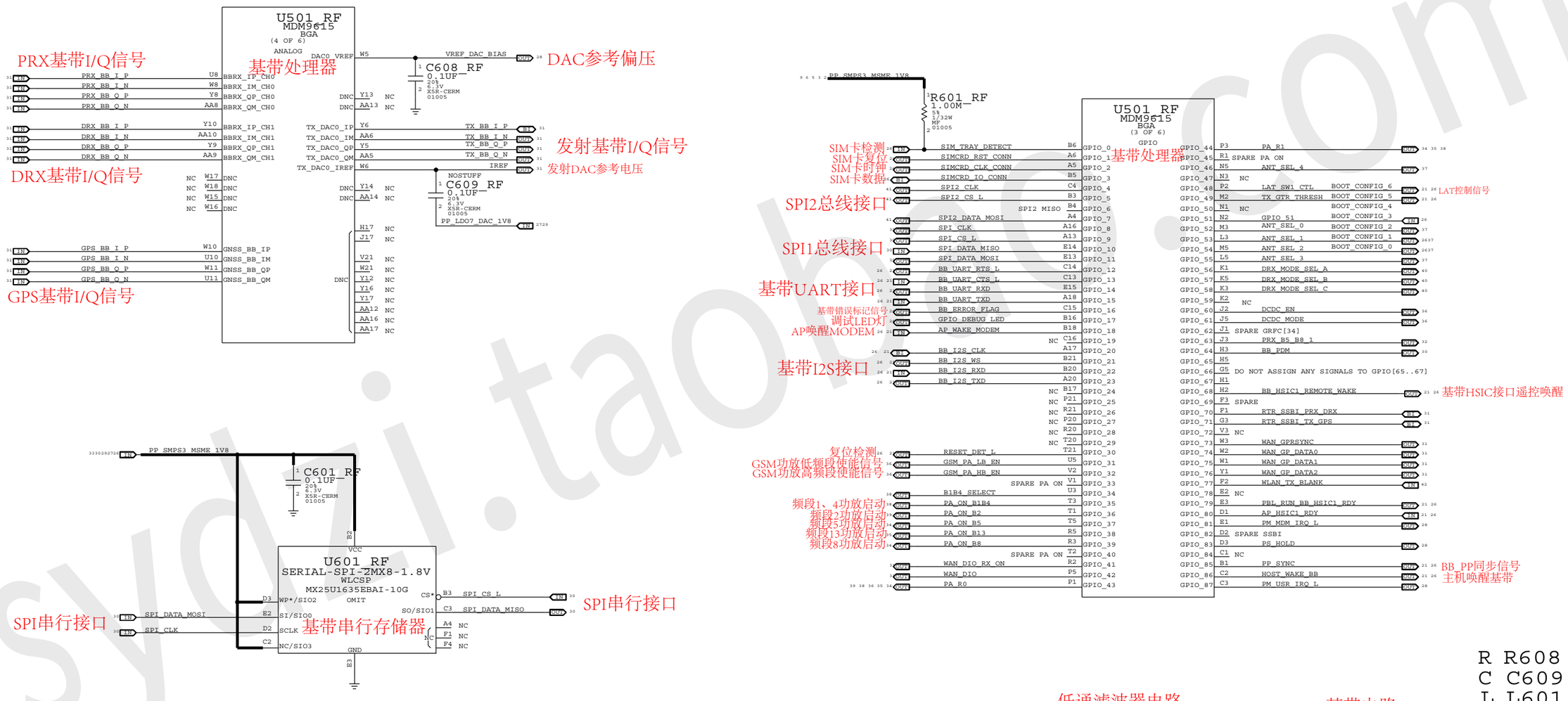

R R608
C C609
L L601

基带电路

PAGE TITLE	MOBILE DATA MODEM (2 OF 2)
Apple Inc.	DRAWING NUMBER 051-9113 SIZE D
	REVISION 11.0.0
	BRANCH
	PAGE 6 OF 19
	SHEET 30 OF 51

NOTICE OF PROPRIETARY PROPERTY:
THE INFORMATION CONTAINED HEREIN IS THE PROPRIETARY PROPERTY OF APPLE INC.
THE POSESSOR AGREES TO THE FOLLOWING:
I TO MAINTAIN THIS DOCUMENT IN CONFIDENCE
II NOT TO REPRODUCE OR COPY IT
III NOT TO REVEAL OR PUBLISH IT IN WHOLE OR PART
IV ALL RIGHTS RESERVED

思源电子 sydzi.taobao.com 为您提供维修手机.笔记本.电脑图纸

RF TRANSCEIVER (1 OF 3)

CONFIDENTIAL AND PROPRIETARY APPLE SYSTEM DESIGN. FOR REFERENCE PURPOSES ONLY - NOT A CHANGE REQUEST.

射频收发器

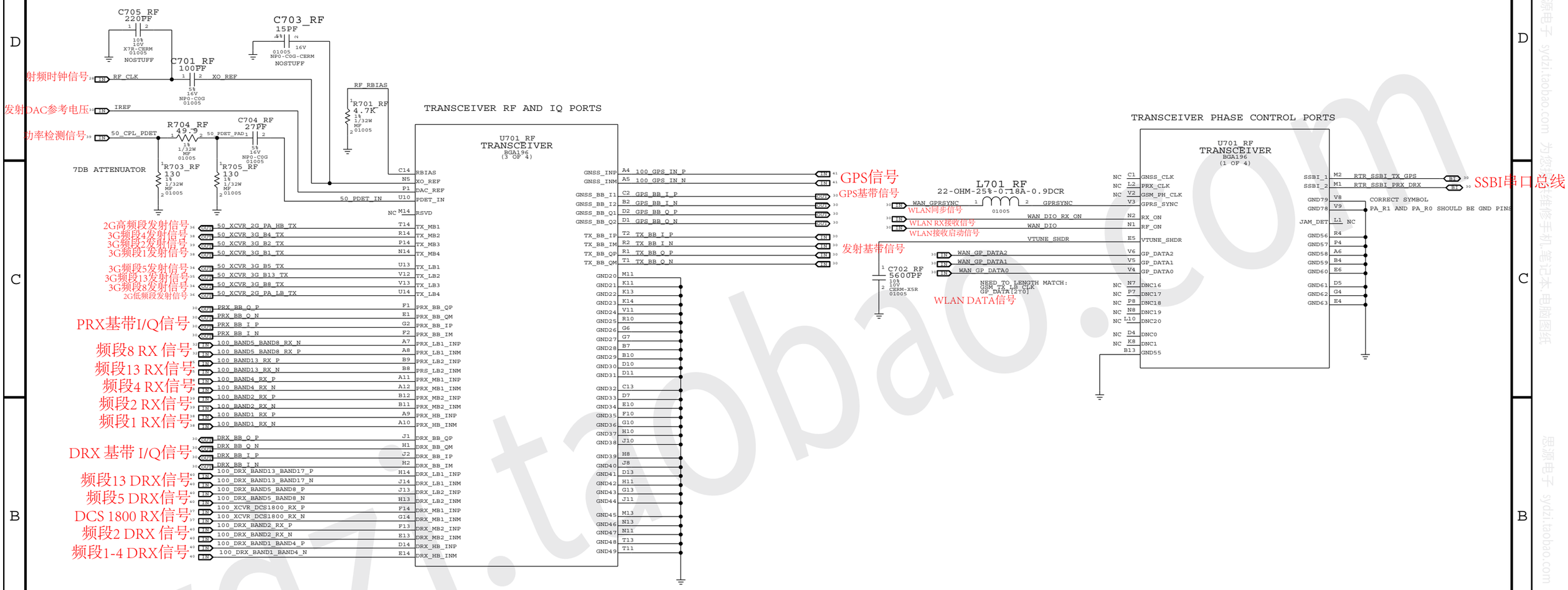

R R705
C C705
L L701
U U701

sydzi.taobao.com
思源电子为您服务！
QQ: 2356146104

射频收发器

PAGE TITLE	RF TRANSCEIVER (1 OF 3)
Apple Inc.	DRAWING NUMBER 051-9113 SIZE D
	REVISION 11.0.0
	BRANCH
	PAGE 7 OF 19
	SHEET 31 OF 51

NOTICE OF PROPRIETARY PROPERTY:
THE INFORMATION CONTAINED HEREIN IS THE PROPRIETARY PROPERTY OF APPLE INC.
THE POSESSOR AGREES TO THE FOLLOWING:
I TO MAINTAIN THIS DOCUMENT IN CONFIDENCE
II NOT TO REPRODUCE OR COPY IT
III NOT TO REVEAL OR PUBLISH IT IN WHOLE OR PART
IV ALL RIGHTS RESERVED

思源电子 sydzi.taobao.com 为您提供维修手机.笔记本.电脑图纸

RF TRANSCEIVER SWITCHING NETWORKS (2 OF 3)

CONFIDENTIAL AND PROPRIETARY APPLE SYSTEM DESIGN. FOR REFERENCE PURPOSES ONLY - NOT A CHANGE REQUEST.

射频收发器

sydzi.taobao.com
思源电子为您服务！
QQ: 2356146104

BAND 5/BAND 8 PRX TRANSCEIVER SWITCH

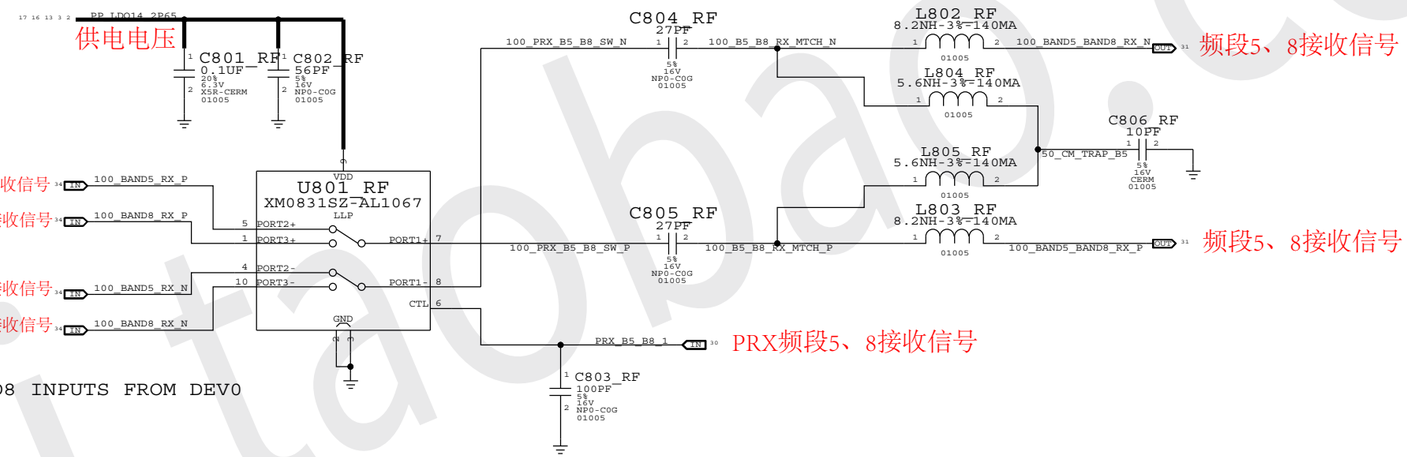

XM0830SZ SWITCH LOGIC

PRX_B5_B8	ACTIVE BAND	PORT
HIGH	8	PORT 1 TO PORT 3
LOW	5	PORT 1 TO PORT 2

SWAPPED BAND5 AND BAND8 INPUTS FROM DEV0

R RXXX
C C806
L L803
U U801

射频处理器

PAGE TITLE	RF TRANSCEIVER (2 OF 3)
Apple Inc.	DRAWING NUMBER 051-9113 SIZE D
	REVISION 11.0.0
	BRANCH
	PAGE 8 OF 19
	SHEET 32 OF 51

NOTICE OF PROPRIETARY PROPERTY:
THE INFORMATION CONTAINED HEREIN IS THE PROPRIETARY PROPERTY OF APPLE INC.
THE POSESSOR AGREES TO THE FOLLOWING:
I TO MAINTAIN THIS DOCUMENT IN CONFIDENCE
II NOT TO REPRODUCE OR COPY IT
III NOT TO REVEAL OR PUBLISH IT IN WHOLE OR PART
IV ALL RIGHTS RESERVED

思源电子 sydzi.taobao.com 为您提供维修手机.笔记本.电脑图纸

RF TRANSCEIVER DECOUPLING (3 OF 3)

sydzi.taobao.com
思源电子为您服务！
QQ: 2356146104

射频核心供电电压 PP_SMPS2_RF1_1V3 — L901_RF FERR-33-OHM-0.8A-0.09-OHM (0201)

PRX 低噪声供电: XW901_RF (SHORT-10L-0.1MM-SM) PP_RF1_14_15 → PP_RF1_14_PRX_LNA

DRX低噪声供电: XW902_RF (SHORT-10L-0.1MM-SM) PP_RF1_15_DRX_LNA; C903_RF 1.0UF 20% 6.3V X5R 0201-MUR CLOSE TO R95

GPS低噪声供电: XW903_RF (SHORT-10L-0.1MM-SM) PP_RF1_13_GPS_LNA

射频核心供电电压 PP_SMPS2_RF1_1V3 → L903_RF FERR-33-OHM-0.8A-0.09-OHM (0201); C910_RF 1.0UF 20% 6.3V X5R 0201-MUR

ROUTE FROM C265 TO U6.T10 AND C269 TO U6.E7
IN A STAR CONFIGURATION FOR ISOLATION BETWEEN E7 AND T10

XW904_RF (SHORT-10L-0.1MM-SM) PP_RF1_11_PDET_TX; C944_RF 0.22UF 20% 6.3V X5R 0201
XW906_RF (SHORT-10L-0.1MM-SM) PP_RF1_12_DIG; C942_RF 0.1UF 20% 6.3V X5R-CERM 01005 PLACE CLOSE TO PIN T10
L924_RF 4.7NH-3%-0.35A (0201) PP_RF1_22_GPS_DIG; C913_RF 0.047UF 20% 4V CERM-X5R 01005 CLOSE TO U6.H5
XW905_RF (SHORT-10L-0.1MM-SM) PP_RF1_11_12_RX_TX_DIG_E7

L923_RF FERR-33-OHM-0.8A-0.09-OHM (0201) PP_RF1_21_GPS_VCO; C915_RF 0.1UF 20% 6.3V X5R-CERM 01005 CLOSE TO U6.D6

L904_RF FERR-33-OHM-0.8A-0.09-OHM (0201); C916_RF 10UF 20% 10V X5R-CERM 0402-1 CLOSE TO L102

PP_RF1_1_PRX_VCO; C917_RF 0.1UF 20% 6.3V X5R-CERM 01005 CLOSE TO U6.M8

L916_RF 4.7NH-3%-0.35A (0201) PP_RF1_18_DRX_LO; C918_RF 1.0UF 20% 6.3V X5R 0201-MUR CLOSE TO U6.H7; C920_RF 27PF 5% 16V NPO-COG 01005

L915_RF 4.7NH-3%-0.35A (0201) PP_RF1_17_PRX_LO; C919_RF 0.1UF 20% 6.3V X5R-CERM 01005 CLOSE TO U6.G8 CLOSE TO U6.E11 AND G8

XW907_RF (SHORT-10L-0.1MM-SM); C179_RF 10UF 20% 10V X5R-CERM 0402-1

L918_RF 120-OHM-25%-450MA (0201) PP_RF1_2_4 → PP_RF1_4_TX_LO 发射一本振供电; C921_RF 0.22UF 20% 6.3V X5R 0201 CLOSE TO U6.M10 AND P10

L919_RF 47-OHM-0.2A (0201) PP_RF1_2_TX_VCO 发射VCO供电; C922_RF 2.2UF 20% 4V X5R-CERM 0201 CLOSE TO U6.U5 CLOSE TO U6.U5

L920_RF 4.7NH-3%-0.35A (0201) PP_RF1_9_HB_DA; C924_RF 1.0UF 20% 6.3V X5R 0201-MUR CLOSE TO U6.P13; C943_RF 100PF 5% 16V NPO-COG 01005

XW908_RF (SHORT-10L-0.1MM-SM) PP_RF1_5_8_9; C941_RF 10UF 20% 10V X5R-CERM 0402-1

L926_RF 10NH-3500MA-0.170OHM (0402) PP_RF1_8_TX_MIXER_LB_DA; C925_RF 0.22UF 20% 6.3V X5R 0201 CLOSE TO U6.P11 AND R13 CLOSE TO U6.P11

L925_RF 70-OHM-300MA (01005-1) PP_RF1_5_PRE_DRIVER; C927_RF 1.0UF 20% 6.3V X5R 0201-MUR CLOSE TO U6.R11

L921_RF 4.7NH-3%-0.35A (0201) PP_RF1_3_20_23 → PP_RF1_3_20_23_RX_PLL 接收PLL电路供电; C936_RF 220PF 10% 10V X7R-CERM 01005 CLOSE TO U6.K4

XW909_RF (SHORT-10L-0.1MM-SM) CLOSE TO U6.R5

L917_RF 12NH+/-3%-0.25A-0.7OHM (0201) PP_RF1_3_20_23_GPS_PLL GPS PLL电路供电; C937_RF 220PF 10% 10V X7R-CERM 01005 CLOSE TO U6.R5

L922_RF 4.7NH-3%-0.35A (0201) PP_RF1_3_20_23_TX_PLL 发射PLL电路供电; C938_RF 0.1UF 20% 6.3V X5R-CERM 01005 CLOSE TO U6.G5

PP_SMPS4_RF2_2V0; C190_RF 4.7UF 20% 10V X5R-CERM 0402 STAR ROUTE

L906_RF 70-OHM-300MA (01005-1) PP_RF2_2_PDET; C923_RF 0.1UF 20% 5.3V X5R-CERM 01005 CLOSE TO U6.V10 CLOSE TO U6.V10

L908_RF 70-OHM-300MA (01005-1) PP_RF2_7_TX_BB; C929_RF 0.1UF 20% 5.3V X5R-CERM 01005 CLOSE TO U6.L13 CLOSE TO U6.L13

L909_RF 70-OHM-300MA (01005-1) PP_RF2_1_5_6_MASTER_BIAS_RX_BB; C931_RF 0.1UF 20% 5.3V X5R-CERM 01005 CLOSE TO U6.K10

L910_RF 70-OHM-300MA (01005-1) PP_RF2_3_RX_VCO; C932_RF 2.2UF 20% 5.3V CERM 402-LF CLOSE TO U6.K7 CLOSE TO U6.K7

L911_RF 70-OHM-300MA (01005-1) PP_RF2_4_TX_VCO; C934_RF 10UF 20% 6.3V CERM-X5R 0402 CLOSE TO U6.T5 CLOSE TO U6.T5

L913_RF 70-OHM-300MA (01005-1) PP_SMPS3_MSME_1V8 → PP_DIG; C939_RF 0.1UF 20% 6.3V X5R-CERM 01005 CLOSE TO U6.M4 AND H4 CLOSE TO U6.M4

L914_RF 240-OHM-25%-0.20A-1.0DCR (01005) PP_LDO2_XO_HS_1V8 → PP_XO_1P8_FILT; C940_RF 0.1UF 10% 16V X5R-CERM 0201 CLOSE TO U6.P5

U701_RF TRANSCEIVER BGA196 (2 OF 4)

PP_RF1_1_PRX_VCO	M8	VDD_RF1_1	RX OSCILLATOR 1
PP_RF1_2_TX_VCO	U5	VDD_RF1_2	TX OSCILLATOR 1
PP_RF1_3_20_23_RX_PLL	K4	VDD_RF1_3	RX PLL
PP_RF1_3_20_23_TX_PLL	R5	VDD_RF1_23	TX PLL
PP_RF1_4_TX_LO	M10	VDD_RF1_4	TX LO HIGH/MID BAND
PP_RF1_5_PRE_DRIVER	R11	VDD_RF1_5	LB/HB PRE DRIVER AMP
	L14	VDD_RF1_6	HB PRE DRIVER AMP
	P10	VDD_RF1_7	TX LB
PP_RF1_8_TX_MIXER_LB_DA	P11	VDD_RF1_8	TX MIXER
PP_RF1_9_HB_DA	P13	VDD_RF1_9	HIGH BAND DRIVER AMP
	R13	VDD_RF1_10	LB DRIVER AMP
PP_RF1_11_PDET_TX	T10	VDD_RF1_11	TX DIGITAL
PP_RF1_12_DIG	M5	VDD_RF1_12	RX/TX/SBI DIGITAL
PP_RF1_13_GPS_LNA	B6	VDD_RF1_13	GPS LNA
PP_RF1_14_PRX_LNA	D8	VDD_RF1_14	PRX LNA
	D9	VDD_RF1_141	PRX LNA
PP_RF1_15_DRX_LNA	G11	VDD_RF1_15	DRX LNA
	F11	VDD_RF1_151	DRX LNA
PP_RF1_11_12_RX_TX_DIG_E7	E7	VDD_RF1_16	RX BB
PP_RF1_17_PRX_LO	E11	VDD_RF1_17	PRX LO
	G8	VDD_RF1_171	PRX LO
PP_RF1_18_DRX_LO	H7	VDD_RF1_18	DRX LO
	B5	VDD_RF1_19	GPS RX
PP_RF1_3_20_23_GPS_PLL	G5	VDD_RF1_20	GPS/SHDR PLL
PP_RF1_21_GPS_VCO	D6	VDD_RF1_21	GPS/SHDR OSCILLATOR AND LO
PP_RF1_22_GPS_DIG	H5	VDD_RF1_22	GPS/SHDR DIGITAL
PP_XO_1P8_FILT	P5	VDD_XO	XO SUPPLY
PP_DIG	M4	VDD_DIG	RF DIGITAL
STAR ROUTE	H4	VDD_DIG_IO	RF DIGITAL IO
PP_RF2_1_5_6_MASTER_BIAS_RX_BB	E9	VDD_RF2_1	MASTER BIAS
PP_RF2_2_PDET	V10	VDD_RF2_2	PDET
PP_RF2_3_RX_VCO	K7	VDD_RF2_3	RX OSCILLATOR 2
PP_RF2_4_TX_VCO	T5	VDD_RF2_4	TX OSCILLATOR 2
STAR ROUTE	E8	VDD_RF2_5	PRX BB
	K10	VDD_RF2_6	DRX BB
PP_RF2_7_TX_BB	L13	VDD_RF2_7	TX BB

GND0	L7		
GND1	L8		
GND2	M7		
GND3	R7		
GND4	T7		
GND5	U7		
GND6	L11		
GND7	U11		
GND8	N10		
GND9	N4		
GND10	L5		
GND11	H6		
GND12	J7		
GND13	K5		
GND14	L4		
GND15	T8		
GND16	R8		
GND17	U8		
GND18	U4		
GND19	T4		

U701_RF TRANSCEIVER BGA196 (4 OF 4)

A1	GND64	DNC8	K1 NC
A2	GND65	DNC9	K2 NC
A3	GND66	DNC10	K3 NC
A13	GND67	DNC11	L3 NC
A14	GND68	DNC12	P2 NC
B1	GND69	GND72	U1
B3	GND70	GND73	U2
B14	GND71	GND74	U3
NC D3	DNC2	DNC13	U6 NC
NC E2	DNC3	DNC14	U9 NC
NC E3	DNC4	GND75	U12
NC G1	DNC5	GND76	V1
NC G3	DNC6	DNC15	V7 NC
NC H3	DNC7	GND77	V14

R R912
C C944
L L924
XWXW906

射频收发器

PAGE TITLE	RF TRANSCEIVER (3 OF 3)
Apple Inc.	DRAWING NUMBER 051-9113 SIZE D
	REVISION 11.0.0
	BRANCH
	PAGE 9 OF 19
	SHEET 33 OF 51

NOTICE OF PROPRIETARY PROPERTY:
THE INFORMATION CONTAINED HEREIN IS THE PROPRIETARY PROPERTY OF APPLE INC.
THE POSESSOR AGREES TO THE FOLLOWING:
I TO MAINTAIN THIS DOCUMENT IN CONFIDENCE
II NOT TO REPRODUCE OR COPY IT
III NOT TO REVEAL OR PUBLISH IT IN WHOLE OR PART
IV ALL RIGHTS RESERVED

CONFIDENTIAL AND PROPRIETARY APPLE SYSTEM DESIGN. FOR REFERENCE PURPOSES ONLY - NOT A CHANGE REQUEST.

思源电子 sydzi.taobao.com 为您提供维修手机.笔记本.电脑图纸

BAND 5/8 PAD

CONFIDENTIAL AND PROPRIETARY APPLE SYSTEM DESIGN. FOR REFERENCE PURPOSES ONLY - NOT A CHANGE REQUEST.

sydzi.taobao.com
思源电子为您服务！
QQ: 2356146104

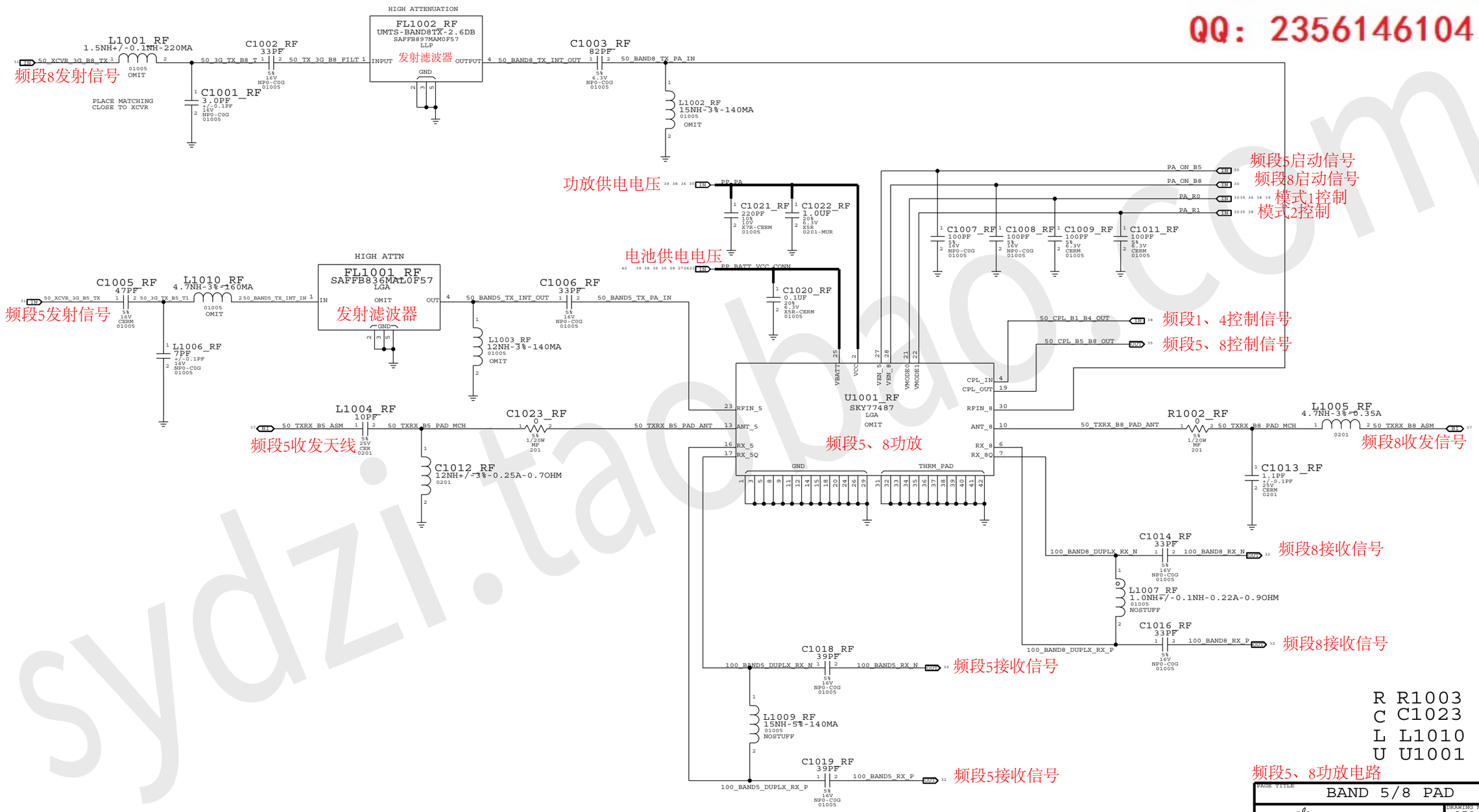

PAGE TITLE	BAND 5/8 PAD
Apple Inc.	DRAWING NUMBER 051-9113 SIZE D
	REVISION 11.0.0
	BRANCH
	PAGE 10 OF 19
	SHEET 34 OF 51

NOTICE OF PROPRIETARY PROPERTY:
THE INFORMATION CONTAINED HEREIN IS THE PROPRIETARY PROPERTY OF APPLE INC.
THE POSESSOR AGREES TO THE FOLLOWING:
I TO MAINTAIN THIS DOCUMENT IN CONFIDENCE
II NOT TO REPRODUCE OR COPY IT
III NOT TO REVEAL OR PUBLISH IT IN WHOLE OR PART
IV ALL RIGHTS RESERVED

思源电子 sydzi.taobao.com 为您提供维修手机.笔记本.电脑图纸

B13/17 INTERSTAGE, PA, AND DUPLEXER

CONFIDENTIAL AND PROPRIETARY APPLE SYSTEM DESIGN. FOR REFERENCE PURPOSES ONLY - NOT A CHANGE REQUEST.

sydzi.taobao.com
思源电子为您服务！
QQ: 2356146104

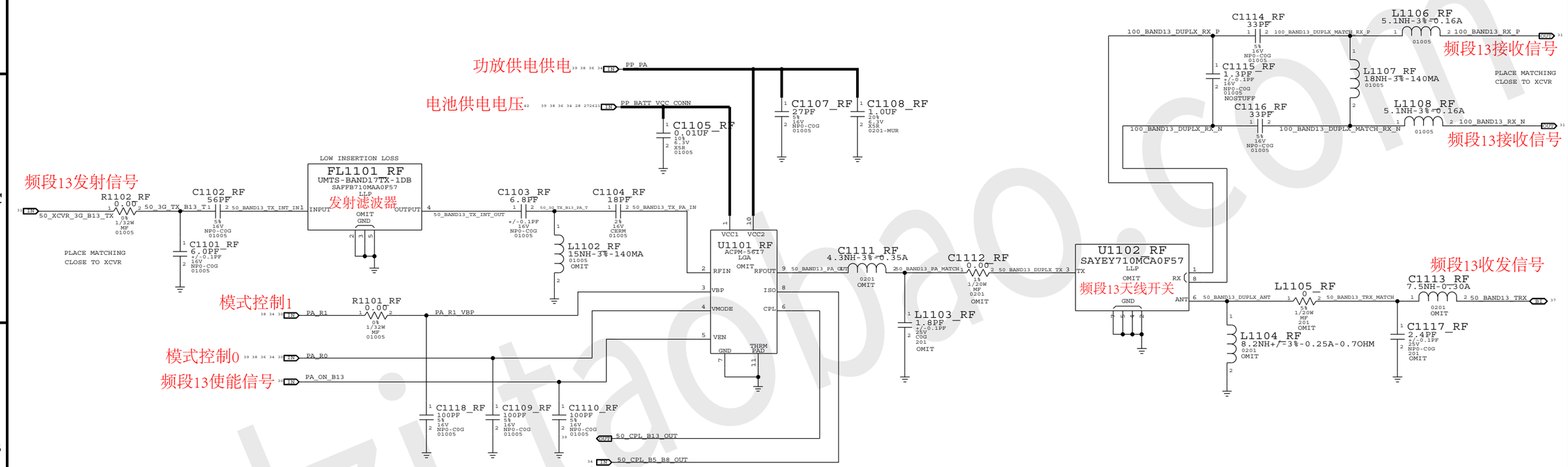

FLFL1101
R R1102
C C1118
L L1108
U U1102

频段13功放电路

PA POWER MODES

MODE	PA_R0	PA_R1
LOW	HIGH	HIGH
MEDIUM	LOW	HIGH
HIGH	LOW	LOW

PAGE TITLE	BAND 13 PA
Apple Inc.	DRAWING NUMBER 051-9113 SIZE D
	REVISION 11.0.0
	BRANCH
	PAGE 11 OF 19
	SHEET 35 OF 51

NOTICE OF PROPRIETARY PROPERTY:
THE INFORMATION CONTAINED HEREIN IS THE PROPRIETARY PROPERTY OF APPLE INC.
THE POSESSOR AGREES TO THE FOLLOWING:
I TO MAINTAIN THIS DOCUMENT IN CONFIDENCE
II NOT TO REPRODUCE OR COPY IT
III NOT TO REVEAL OR PUBLISH IT IN WHOLE OR PART
IV ALL RIGHTS RESERVED

思源电子 sydzi.taobao.com 为您提供维修手机.笔记本.电脑图纸

2G PA, PA DC/DC CONVERTER

CONFIDENTIAL AND PROPRIETARY APPLE SYSTEM DESIGN. FOR REFERENCE PURPOSES ONLY - NOT A CHANGE REQUEST.

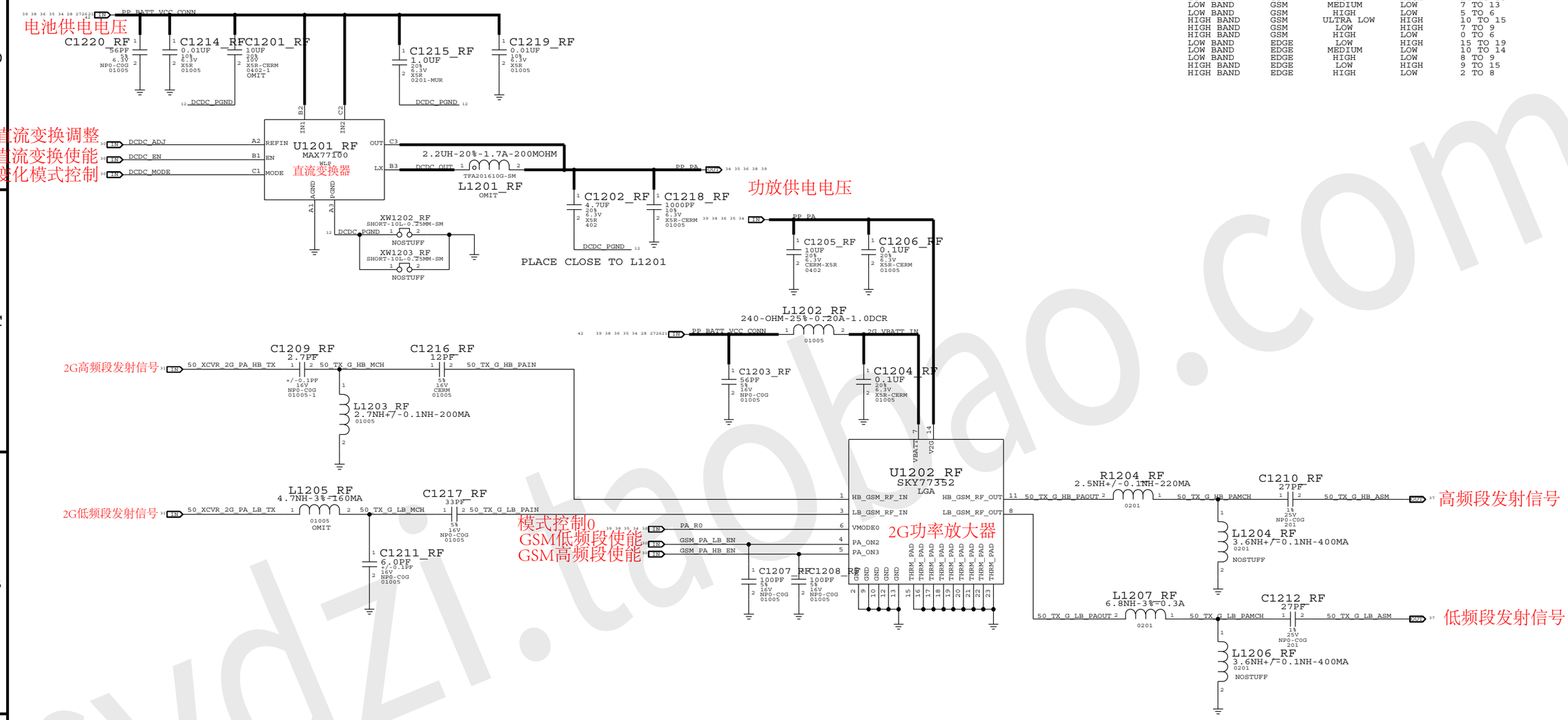

2G PA GAIN MODES

BAND	MODE	GAIN MODE	PA_R1	PCL RANGE
LOW BAND	GSM	ULTRA LOW	HIGH	16 TO 19
LOW BAND	GSM	LOW	HIGH	14 TO 15
LOW BAND	GSM	MEDIUM	LOW	7 TO 13
LOW BAND	GSM	HIGH	LOW	5 TO 6
HIGH BAND	GSM	ULTRA LOW	HIGH	10 TO 15
HIGH BAND	GSM	LOW	HIGH	7 TO 9
HIGH BAND	GSM	HIGH	LOW	0 TO 6
LOW BAND	EDGE	LOW	HIGH	15 TO 19
LOW BAND	EDGE	MEDIUM	LOW	10 TO 14
LOW BAND	EDGE	HIGH	LOW	8 TO 9
HIGH BAND	EDGE	LOW	HIGH	9 TO 15
HIGH BAND	EDGE	HIGH	LOW	2 TO 8

R R1209
C C1220
L L1207
U U1202

sydzi.taobao.com
思源电子为您服务！
QQ: 2356146104

PAGE TITLE: 2G PA, DCDC CONVERTER

Apple Inc.

DRAWING NUMBER: 051-9113 SIZE: D

REVISION: 11.0.0

BRANCH

PAGE: 12 OF 19

SHEET: 36 OF 51

NOTICE OF PROPRIETARY PROPERTY:
THE INFORMATION CONTAINED HEREIN IS THE PROPRIETARY PROPERTY OF APPLE INC.
THE POSESSOR AGREES TO THE FOLLOWING:
I TO MAINTAIN THIS DOCUMENT IN CONFIDENCE
II NOT TO REPRODUCE OR COPY IT
III NOT TO REVEAL OR PUBLISH IT IN WHOLE OR PART
IV ALL RIGHTS RESERVED

思源电子 sydzi.taobao.com 为您提供维修手机.笔记本.电脑图纸

ASM,DCS RX

CONFIDENTIAL AND PROPRIETARY APPLE SYSTEM DESIGN. FOR REFERENCE PURPOSES ONLY - NOT A CHANGE REQUEST.

天线开关模块，DCS接收电路

sydzi.taobao.com
思源电子为您服务！
QQ: 2356146104

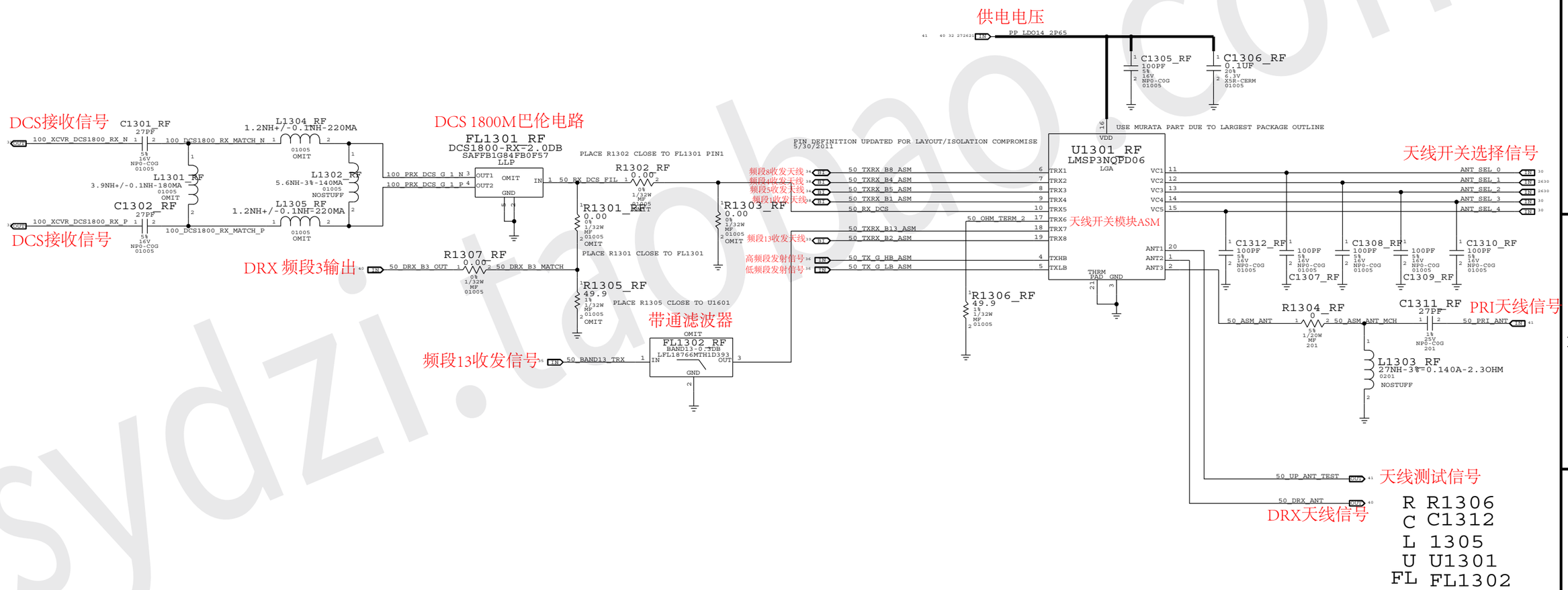

PAGE TITLE	DCS RX, ASM
Apple Inc.	DRAWING NUMBER 051-9113 SIZE D
	REVISION 11.0.0
	BRANCH
	PAGE 13 OF 19
	SHEET 37 OF 51

NOTICE OF PROPRIETARY PROPERTY:
THE INFORMATION CONTAINED HEREIN IS THE PROPRIETARY PROPERTY OF APPLE INC.
THE POSESSOR AGREES TO THE FOLLOWING:
I TO MAINTAIN THIS DOCUMENT IN CONFIDENCE
II NOT TO REPRODUCE OR COPY IT
III NOT TO REVEAL OR PUBLISH IT IN WHOLE OR PART
IV ALL RIGHTS RESERVED

思源电子 sydzi.taobao.com 为您提供维修手机.笔记本.电脑图纸

BAND 1/4 PAD

CONFIDENTIAL AND PROPRIETARY APPLE SYSTEM DESIGN. FOR REFERENCE PURPOSES ONLY - NOT A CHANGE REQUEST.

频段1、4功放电路

sydzi.taobao.com
思源电子为您服务！
QQ: 2356146104

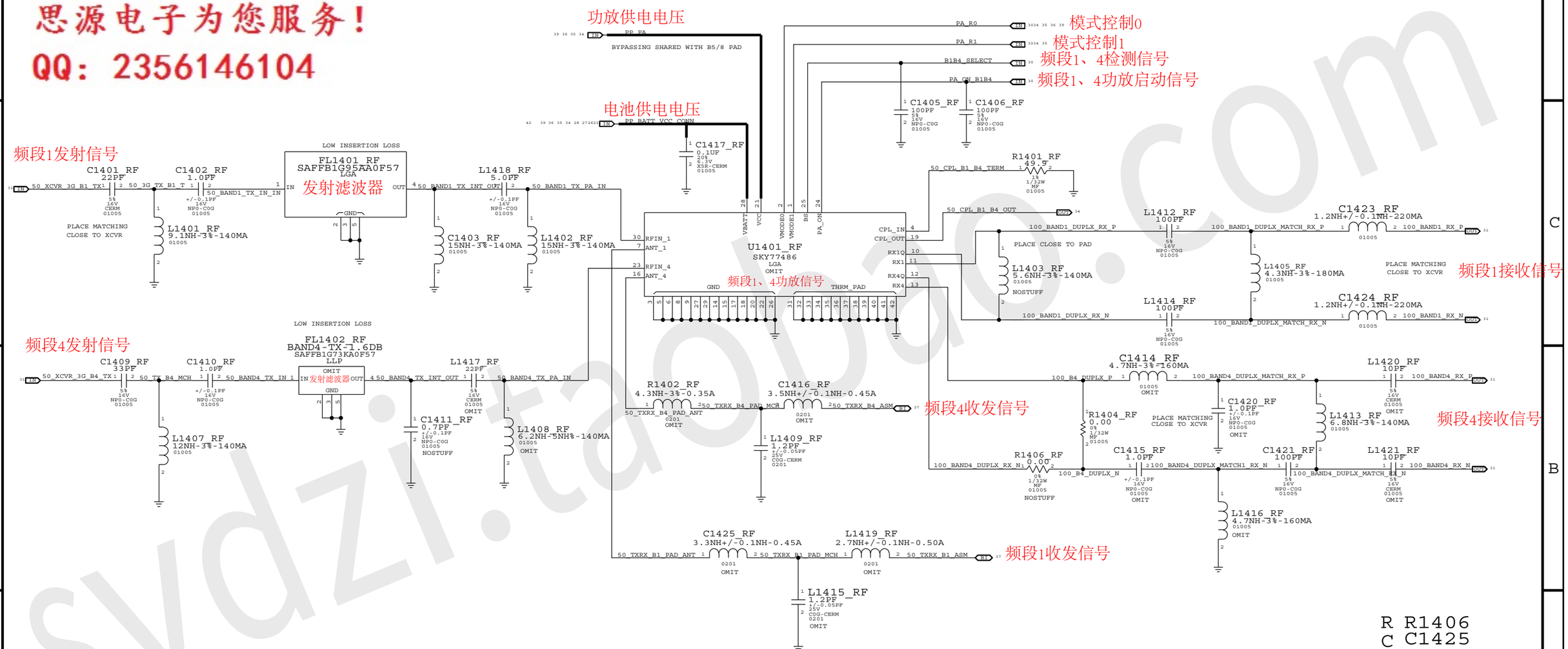

R R1406
C C1425
L L1422
U U1401
FL FL1101

频段1、4功放电路

PAGE TITLE	BAND 1/4 PAD
Apple Inc.	DRAWING NUMBER 051-9113 SIZE D
	REVISION 11.0.0
	BRANCH
	PAGE 14 OF 19
	SHEET 38 OF 51

NOTICE OF PROPRIETARY PROPERTY:
THE INFORMATION CONTAINED HEREIN IS THE PROPRIETARY PROPERTY OF APPLE INC.
THE POSESSOR AGREES TO THE FOLLOWING:
I TO MAINTAIN THIS DOCUMENT IN CONFIDENCE
II NOT TO REPRODUCE OR COPY IT
III NOT TO REVEAL OR PUBLISH IT IN WHOLE OR PART
IV ALL RIGHTS RESERVED

思源电子 sydzi.taobao.com 为您提供维修手机.笔记本.电脑图纸

BAND2 PAD

CONFIDENTIAL AND PROPRIETARY APPLE SYSTEM DESIGN. FOR REFERENCE PURPOSES ONLY - NOT A CHANGE REQUEST.

频段2功放电路

sydzi.taobao.com
思源电子为您服务!
QQ: 2356146104

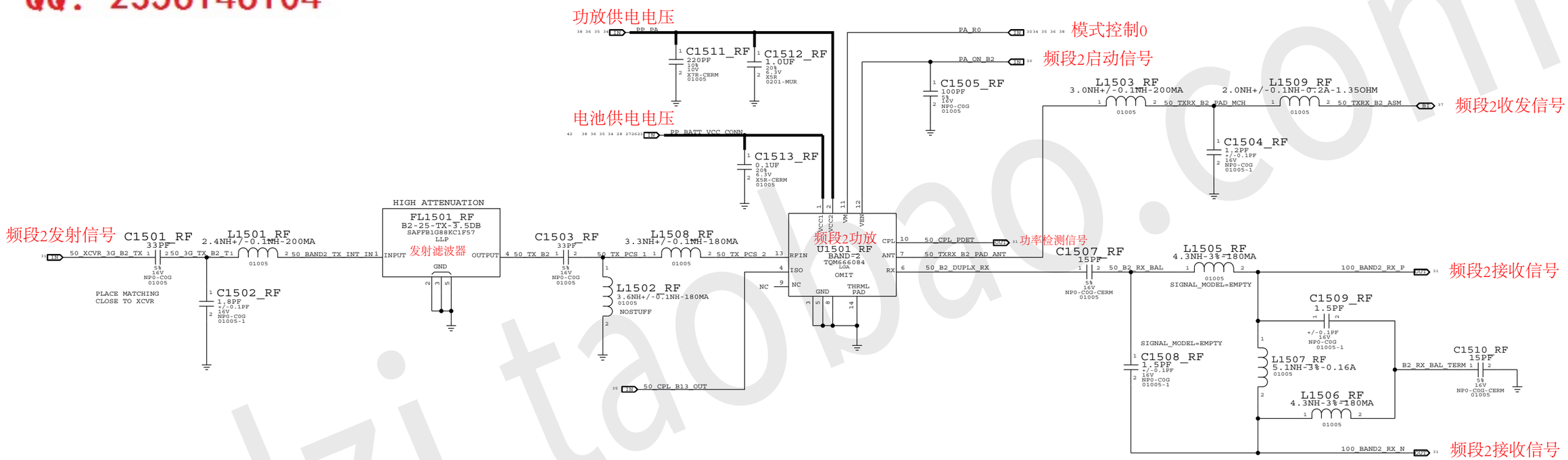

R R1501
C C1513
L L1509
U U1501
FL FL1501

频段2功放电路

PAGE TITLE	BAND2 PAD
Apple Inc.	DRAWING NUMBER 051-9113 / SIZE D
	REVISION 11.0.0
	BRANCH
	PAGE 15 OF 19
	SHEET 39 OF 51

NOTICE OF PROPRIETARY PROPERTY:
THE INFORMATION CONTAINED HEREIN IS THE PROPRIETARY PROPERTY OF APPLE INC.
THE POSESSOR AGREES TO THE FOLLOWING:
I TO MAINTAIN THIS DOCUMENT IN CONFIDENCE
II NOT TO REPRODUCE OR COPY IT
III NOT TO REVEAL OR PUBLISH IT IN WHOLE OR PART
IV ALL RIGHTS RESERVED

思源电子 sydzi.taobao.com 为您提供维修手机.笔记本.电脑图纸

RX DIVERSITY

CONFIDENTIAL AND PROPRIETARY APPLE SYSTEM DESIGN. FOR REFERENCE PURPOSES ONLY - NOT A CHANGE REQUEST.

接收分集电路

DIVERSITY MODULE LOGIC

BAND	VC1	VC2	VC3
BAND 1/4			
BAND 2			
BAND 5			
BAND 8			
BAND 13/17			

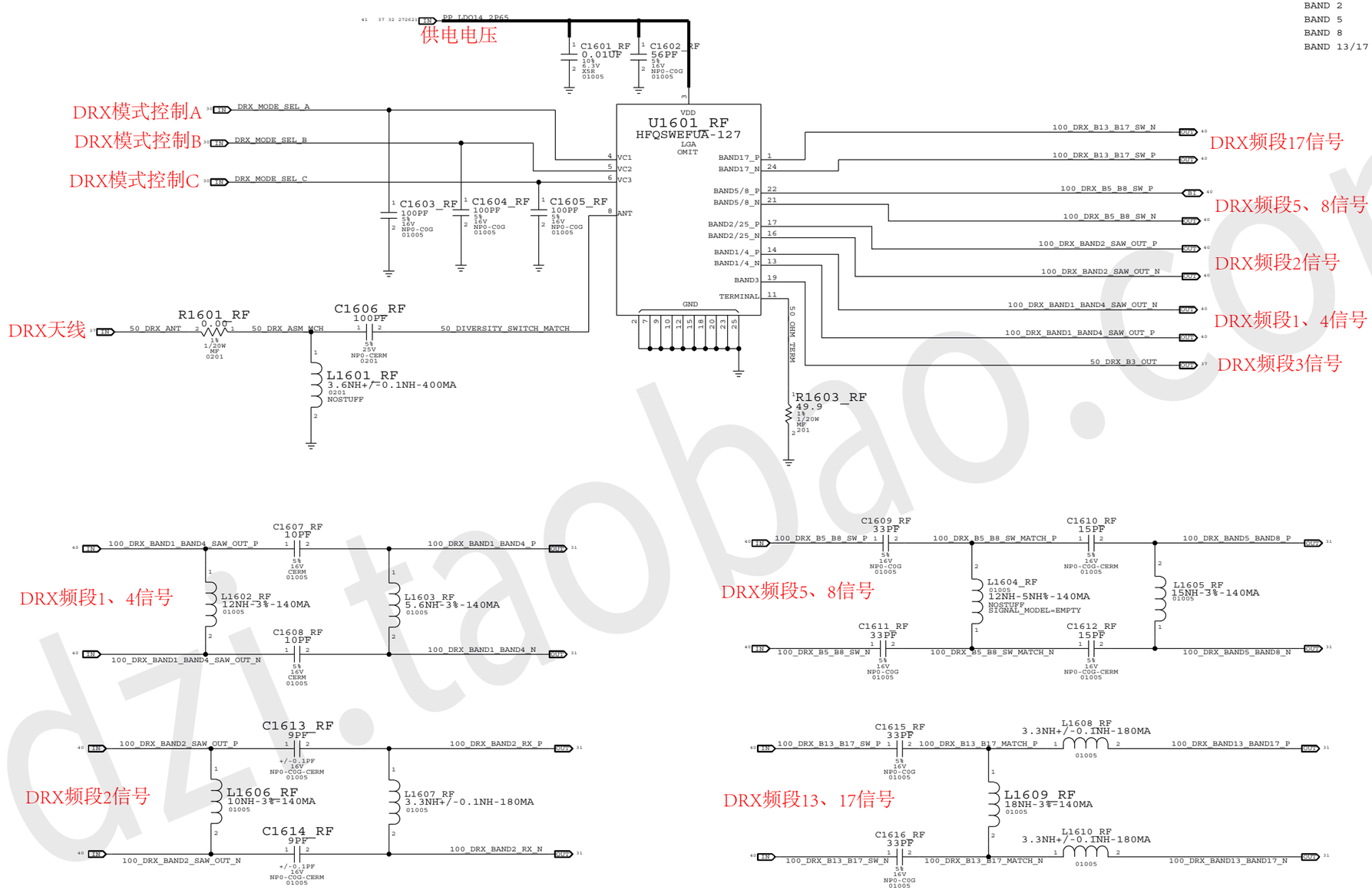

R.R1603
C C1616
L L1610
U U1601

sydzi.taobao.com
思源电子为您服务！
QQ: 2356146104

接收分集电路

PAGE TITLE	RX DIVERSITY
Apple Inc.	DRAWING NUMBER 051-9113 SIZE D
	REVISION 11.0.0
	BRANCH
	PAGE 16 OF 19
	SHEET 40 OF 51

NOTICE OF PROPRIETARY PROPERTY:
THE INFORMATION CONTAINED HEREIN IS THE PROPRIETARY PROPERTY OF APPLE INC.
THE POSESSOR AGREES TO THE FOLLOWING:
I TO MAINTAIN THIS DOCUMENT IN CONFIDENCE
II NOT TO REPRODUCE OR COPY IT
III NOT TO REVEAL OR PUBLISH IT IN WHOLE OR PART
IV ALL RIGHTS RESERVED

思源电子 sydzi.taobao.com 为您提供维修手机.笔记本.电脑图纸

GPS

GPS电路

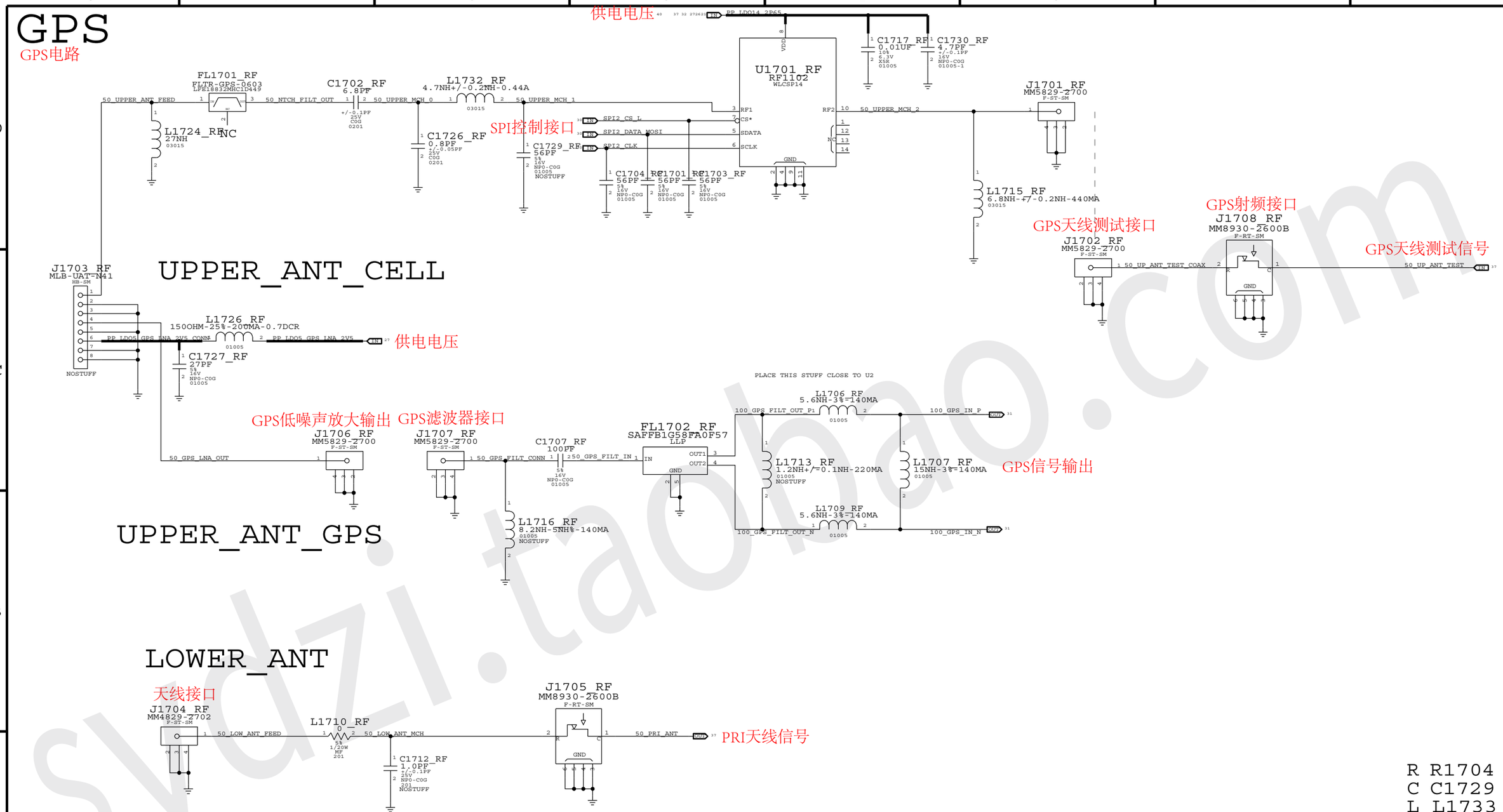

R R1704
C C1729
L L1733
U U1703

sydzi.taobao.com
思源电子为您服务！
QQ: 2356146104

GPS电路

PAGE TITLE	GPS
Apple Inc.	DRAWING NUMBER 051-9113 SIZE D
	REVISION 11.0.0
NOTICE OF PROPRIETARY PROPERTY: THE INFORMATION CONTAINED HEREIN IS THE PROPRIETARY PROPERTY OF APPLE INC. THE POSESSOR AGREES TO THE FOLLOWING: I TO MAINTAIN THIS DOCUMENT IN CONFIDENCE II NOT TO REPRODUCE OR COPY IT III NOT TO REVEAL OR PUBLISH IT IN WHOLE OR PART IV ALL RIGHTS RESERVED	BRANCH
	PAGE 17 OF 19
	SHEET 41 OF 51

CONFIDENTIAL AND PROPRIETARY APPLE SYSTEM DESIGN. FOR REFERENCE PURPOSES ONLY - NOT A CHANGE REQUEST.

思源电子 sydzi.taobao.com 为您提供维修手机.笔记本.电脑图纸

WLAN/BT

CONFIDENTIAL AND PROPRIETARY APPLE SYSTEM DESIGN. FOR REFERENCE PURPOSES ONLY - NOT A CHANGE REQUEST.

sydzi.taobao.com
思源电子为您服务！
QQ: 2356146104

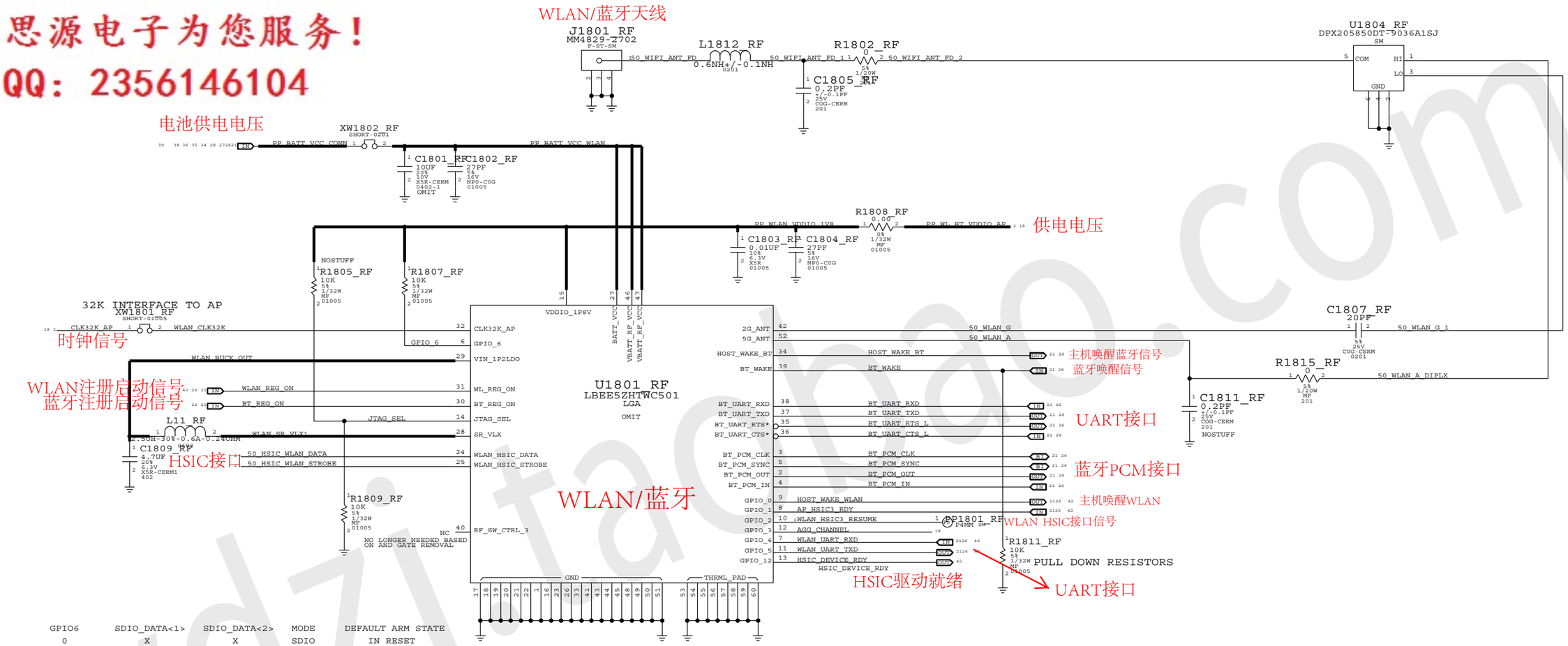

GPIO6	SDIO_DATA<1>	SDIO_DATA<2>	MODE	DEFAULT ARM STATE
0	X	X	SDIO	IN RESET
1	X	0	GSPI	IN RESET
1	0	1	HSIC	OUT OF RESET
1	1	1	BOOTLESS HSIC	IN RESET

R R1815
C C1811
L L1812
U U1802
J J1802

WLAN/蓝牙电路

PAGE TITLE	WIFI/BT
Apple Inc.	DRAWING NUMBER 051-9113 SIZE D
	REVISION 11.0.0
	BRANCH
	PAGE 18 OF 19
	SHEET 42 OF 51

NOTICE OF PROPRIETARY PROPERTY:
THE INFORMATION CONTAINED HEREIN IS THE PROPRIETARY PROPERTY OF APPLE INC.
THE POSESSOR AGREES TO THE FOLLOWING:
I TO MAINTAIN THIS DOCUMENT IN CONFIDENCE
II NOT TO REPRODUCE OR COPY IT
III NOT TO REVEAL OR PUBLISH IT IN WHOLE OR PART
IV ALL RIGHTS RESERVED

思源电子 sydzi.taobao.com 为您提供维修手机.笔记本.电脑图纸

RADIO BOM OPTIONS

CONFIDENTIAL AND PROPRIETARY APPLE SYSTEM DESIGN. FOR REFERENCE PURPOSES ONLY - NOT A CHANGE REQUEST.

HW_ID PA_ID BOM OPTIONS

PART#	QTY	DESCRIPTION	REFERENCE DESIGNATOR(S)	CRITICAL	BOM OPTION
118S0685	1	PA_ID RES DIVIDER	R304_RF	Y	B4_17
118S0656	1	PA_ID RES DIVIDER	R304_RF	Y	B3_13
118S0719	1	PA_ID RES DIVIDER	R302_RF	Y	B4_17
118S0685	1	PA_ID RES DIVIDER	R302_RF	Y	B3_13

SPI NOR BOM OPTIONS

PART#	QTY	DESCRIPTION	REFERENCE DESIGNATOR(S)	CRITICAL	BOM OPTION
335S0874	1	SERIAL SPI NOR - MICRONIX	U601_RF	Y	B4_17
335S0874	1	SERIAL SPI NOR - MICRONIX	U601_RF	Y	B3_13

B5/B5E BOM OPTIONS

PART#	QTY	DESCRIPTION	REFERENCE DESIGNATOR(S)	CRITICAL	BOM OPTION
353S3415	1	SKY77487 BAND 5/8 PAD	U1001_RF	Y	B4_17
353S3568	1	SKY77491 BAND5E/8 PAD	U1001_RF	Y	B3_13
155S0552	1	BAND5 TX SAW	FL1001_RF	Y	B4_17
155S0742	1	BAND5/BC10 TX SAW	FL1001_RF	Y	B3_13
152S1563	1	1.5NH, INDUCTOR - MURATA	L1001_RF	Y	B4_17
152S1662	1	1.5NH, INDUCTOR - TDK	L1001_RF	Y	B3_13
152S1577	1	15NH, INDUCTOR - MURATA	L1002_RF	Y	B4_17
152S1665	1	15NH, INDUCTOR - TDK	L1002_RF	Y	B3_13
152S1576	1	12NH, INDUCTOR - MURATA	L1003_RF	Y	B4_17
152S1664	1	12NH, INDUCTOR - TDK	L1003_RF	Y	B3_13
152S1570	1	4.7NH, INDUCTOR - MURATA	L1010_RF	Y	B4_17
152S1663	1	4.7NH, INDUCTOR - TDK	L1010_RF	Y	B3_13

B13/17 BOM OPTIONS

PART#	QTY	DESCRIPTION	REFERENCE DESIGNATOR(S)	CRITICAL	BOM OPTION
152S1328	1	4.3NH INDUCTOR - 0201	C1111_RF	Y	B4_17
152S1353	1	3.6NH INDUCTOR - 0201	C1111_RF	Y	B3_13
131S0198	1	1.8PF CAPACITOR - 0201	L1103_RF	Y	B4_17
118S0724	1	0 OHM JUMPER - 0201	C1112_RF	Y	B4_17
131S0204	1	22PF CAPACITOR - 0201	C1112_RF	Y	B3_13
118S0724	1	0 OHM JUMPER - 0201	L1105_RF	Y	B4_17
152S1443	1	2.0NH INDUCTOR - 0201	L1105_RF	Y	B3_13
152S1320	1	7.5NH INDUCTOR - 0201	C1113_RF	Y	B4_17
131S0166	1	39PF CAPACITOR - 0201	C1113_RF	Y	B3_13
131S0176	1	2.4PF CAPACITOR - 0201	C1117_RF	Y	B4_17

DCDC BOM OPTIONS

PART#	QTY	DESCRIPTION	REFERENCE DESIGNATOR(S)	CRITICAL	BOM OPTION
152S1648	1	POWER INDUCTOR - TAIYO YUDEN	L1201_RF	Y	B4_17
152S1648	1	POWER INDUCTOR - TAIYO YUDEN	L1201_RF	Y	B3_13
152S1570	1	4.7NH, INDUCTOR - MURATA	L1205_RF	Y	B4_17
152S1663	1	4.7NH, INDUCTOR - TDK	L1205_RF	Y	B3_13

WIFI BOM OPTIONS

PART#	QTY	DESCRIPTION	REFERENCE DESIGNATOR(S)	CRITICAL	BOM OPTION
339S0171	1	WIFI MODULE - MURATA	U1801_RF	Y	B4_17
339S0171	1	WIFI MODULE - MURATA	U1801_RF	Y	B3_13

sydzi.taobao.com
思源电子为您服务！
QQ: 2356146104

SINGING CAP BOM OPTIONS

NEED TO COPY FROM AP TABLE
WHEN STAN FINISHES

B13/17 BOM OPTIONS

PART#	QTY	DESCRIPTION	REFERENCE DESIGNATOR(S)	CRITICAL	BOM OPTION
155S0620	1	BAND17 TX SAW	FL1101_RF	Y	B4_17
155S0619	1	BAND13 TX SAW	FL1101_RF	Y	B3_13
353S3567	1	BAND17 PAM - SKYWORKS	U1101_RF	Y	B4_17
353S3441	1	BAND13 PAM - AVAGO	U1101_RF	Y	B3_13
155S0709	1	BAND17 DUPLEXER - MURATA	U1102_RF	Y	B4_17
155S0738	1	BAND13 DUPLEXER - EPCOS	U1102_RF	Y	B3_13
152S1336	1	BAND17 INDUCTOR - 8.2NH	L1104_RF	Y	B4_17
152S1342	1	BAND13 INDUCTOR - 15NH	L1104_RF	Y	B3_13
152S1577	1	15NH, INDUCTOR - MURATA	L1102_RF	Y	B4_17
152S1576	1	12NH, INDUCTOR - MURATA	L1102_RF	Y	B3_13

B2 PAD BOM OPTIONS

PART#	QTY	DESCRIPTION	REFERENCE DESIGNATOR(S)	CRITICAL	BOM OPTION
353S3715	1	TQM666084 B2 TQS PAD	U1501_RF	Y	B4_17
353S3459	1	TQM666083 B25 TQS PAD	U1501_RF	Y	B3_13

DIVERISTY MODULE BOM OPTIONS

PART#	QTY	DESCRIPTION	REFERENCE DESIGNATOR(S)	CRITICAL	BOM OPTION
353S3516	1	B17 MURATA DIVERSITY MODULE	U1601_RF	Y	B4_17
353S3562	1	B13/BC10 DIVERSITY MODULE	U1601_RF	Y	B3_13

B3/DCS1800 BOM OPTIONS

PART#	QTY	DESCRIPTION	REFERENCE DESIGNATOR(S)	CRITICAL	BOM OPTION
155S0596	1	DCS1800 RX FIL	FL1301_RF	Y	B4_17
155S0729	1	BAND3 RX FIL	FL1301_RF	Y	B3_13
155S0695	1	THRU LINE	FL1302_RF	Y	B4_17
155S0722	1	BAND13 TX LPF	FL1302_RF	Y	B3_13
152S1656	1	3.0NH INDUCTOR	R1301_RF	Y	B3_13
117S0161	1	0OHM RES	R1302_RF	Y	B4_17
118S0652	1	49.9OHM RES	R1303_RF	Y	B3_13
118S0652	1	49.9OHM RES	R1305_RF	Y	B4_17
152S1562	1	1.2NH INDUCTOR	L1304_RF	Y	B4_17
152S1720	1	1.8NH INDUCTOR	L1304_RF	Y	B3_13
152S1562	1	1.2NH INDUCTOR	L1305_RF	Y	B4_17
152S1720	1	1.8NH INDUCTOR	L1305_RF	Y	B3_13
152S1569	1	3.9NH INDUCTOR	L1301_RF	Y	B4_17
152S1570	1	4.7NH INDUCTOR	L1301_RF	Y	B3_13

B3/B4 RX BOM OPTIONS

PART#	QTY	DESCRIPTION	REFERENCE DESIGNATOR(S)	CRITICAL	BOM OPTION
152S1570	1	4.7NH INDUCTOR - 01005	C1414_RF	Y	B4_17
131S0375	1	1.0PF CAPACITOR - 01005	C1415_RF	Y	B4_17
131S0375	1	1.0PF CAPACITOR - 01005	C1420_RF	Y	B4_17
152S1570	1	4.7NH INDUCTOR - 01005	L1416_RF	Y	B4_17
152S1571	1	5.6NH INDUCTOR - 01005	C1414_RF	Y	B3_13
131S0377	1	1.2PF CAPACITOR - 01005	C1415_RF	Y	B3_13
131S0377	1	1.2PF CAPACITOR - 01005	C1420_RF	Y	B3_13
152S1571	1	5.6NH INDUCTOR - 01005	L1416_RF	Y	B3_13
131S0219	1	10PF CAPACITOR - 01005	L1420_RF	Y	B4_17
131S0219	1	10PF CAPACITOR - 01005	L1421_RF	Y	B4_17
152S1562	1	1.2NH INDUCTOR - 01005	L1420_RF	Y	B3_13
152S1562	1	1.2NH INDUCTOR - 01005	L1421_RF	Y	B3_13
152S1328	1	4.3NH INDUCTOR - 0201	R1402_RF	Y	B4_17
152S1688	1	3.5NH INDUCTOR - 0201	C1416_RF	Y	B4_17
152S1284	1	3.3NH INDUCTOR - 0201	R1402_RF	Y	B3_13
152S1284	1	3.3NH INDUCTOR - 0201	C1416_RF	Y	B3_13

B3/B4 TX BOM OPTIONS

PART#	QTY	DESCRIPTION	REFERENCE DESIGNATOR(S)	CRITICAL	BOM OPTION
131S0215	1	22PF CAPACITOR - 01005	L1417_RF	Y	B4_17
152S1569	1	3.9NH INDUCTOR - 01005	L1417_RF	Y	B3_13
131S0369	1	0.5PF CAPACITOR - 01005	L1408_RF	Y	B3_13
152S1284	1	3.3NH INDUCTOR - 0201	C1425_RF	Y	B4_17
152S1705	1	2.7NH INDUCTOR - 0201	L1419_RF	Y	B4_17
131S0551	1	1.2PF CAPACITOR - 0201	L1415_RF	Y	B4_17
152S1284	1	3.3NH INDUCTOR - 0201	C1425_RF	Y	B3_13
152S1705	1	2.7NH INDUCTOR - 0201	L1419_RF	Y	B3_13
131S0551	1	1.2PF CAPACITOR - 0201	L1415_RF	Y	B3_13

B3/B4 BOM OPTIONS

PART#	QTY	DESCRIPTION	REFERENCE DESIGNATOR(S)	CRITICAL	BOM OPTION
353S3255	1	B1/4 PAD - AVAGO	U1401_RF	Y	B4_17
353S3443	1	B1/3 PAD - AVAGO	U1401_RF	Y	B3_13
155S0590	1	B4 TX FIL	FL1402_RF	Y	B4_17
155S0712	1	B3 TX FIL	FL1402_RF	Y	B3_13

PAGE TITLE
RADIO BOM OPTIONS

Apple Inc.

DRAWING NUMBER 051-9113 SIZE D
REVISION 11.0.0
BRANCH
PAGE 19 OF 19
SHEET 43 OF 51

NOTICE OF PROPRIETARY PROPERTY:
THE INFORMATION CONTAINED HEREIN IS THE PROPRIETARY PROPERTY OF APPLE INC.
THE POSESSOR AGREES TO THE FOLLOWING:
I TO MAINTAIN THIS DOCUMENT IN CONFIDENCE
II NOT TO REPRODUCE OR COPY IT
III NOT TO REVEAL OR PUBLISH IT IN WHOLE OR PART
IV ALL RIGHTS RESERVED

思源电子 sydzi.taobao.com 为您提供维修手机.笔记本.电脑图纸

Title: Basenet Report
Design: single_brd
Date: Apr 30 16:27:24 2012

Base nets and synonyms for
single_brd_lib.SINGLE_BRD(@single_brd_lib.single_brd(sch_1))

Base Signal	Synonyms	Location([Zone][dir])
45_CAM0_CLK	45_CAM0_CLK - @single_brd_lib.SINGLE_BRD	7C1 20D7
45_CAM0_CLK_R	45_CAM0_CLK_R - @single_brd_lib.SINGLE_BRD	7C3
45_CAM1_CLK	45_CAM1_CLK - @single_brd_lib.SINGLE_BRD	7C1 11D8
45_CAM1_CLK_R	45_CAM1_CLK_R - @single_brd_lib.SINGLE_BRD	7C3
45_DWI_AP_CLK	45_DWI_AP_CLK - @single_brd_lib.SINGLE_BRD	3D3 13A2 13B7
45_DWI_AP_DO	45_DWI_AP_DO - @single_brd_lib.SINGLE_BRD	3D3 13A2 13B7
45_FMI0_DQS	45_FMI0_DQS - @single_brd_lib.SINGLE_BRD	6B6 6B8 6C2
45_FMI0_RE_L	45_FMI0_RE_L - @single_brd_lib.SINGLE_BRD	6B6 6B8 6C2
45_FMI1_DQS	45_FMI1_DQS - @single_brd_lib.SINGLE_BRD	6B3 6B5
45_FMI1_RE_L	45_FMI1_RE_L - @single_brd_lib.SINGLE_BRD	6B3 6B5
45_I2S0_BCLK	45_I2S0_BCLK - @single_brd_lib.SINGLE_BRD	3D4 9C2
45_I2S0_MCK_R	45_I2S0_MCK_R - @single_brd_lib.SINGLE_BRD	3D5
45_I2S0_MCLK	45_I2S0_MCLK - @single_brd_lib.SINGLE_BRD	3D5 9C2
45_I2S1_BCLK	45_I2S1_BCLK - @single_brd_lib.SINGLE_BRD	3D4 21C4
	BB_I2S_CLK - @single_brd_lib.RADIO_MLB(i594_page 19)	26C8 30B4
45_I2S2_BCLK	45_I2S2_BCLK - @single_brd_lib.SINGLE_BRD	3D4 9C2 14C5
45_I2S2_MCK_R	45_I2S2_MCK_R - @single_brd_lib.SINGLE_BRD	3D5
45_I2S2_MCLK	45_I2S2_MCLK - @single_brd_lib.SINGLE_BRD	3D5 14C5
45_I2S3_BCLK	45_I2S3_BCLK - @single_brd_lib.SINGLE_BRD	3C4 21B4
	BT_PCM_CLK - @single_brd_lib.RADIO_MLB(i594_page 19)	26B8 42B3
45_I2S4_BCLK	45_I2S4_BCLK - @single_brd_lib.SINGLE_BRD	3C4 9C2
45_PROX_RX	45_PROX_RX - @single_brd_lib.SINGLE_BRD	11C8 17C8
45_PROX_RX_CONN	45_PROX_RX_CONN - @single_brd_lib.SINGLE_BRD	11C5
45_XTAL_24M_I	45_XTAL_24M_I - @single_brd_lib.SINGLE_BRD	2C4
45_XTAL_24M_O	45_XTAL_24M_O - @single_brd_lib.SINGLE_BRD	2B4
50_HSIC1_DATA	50_HSIC1_DATA - @single_brd_lib.SINGLE_BRD	2C6 21B4
	50_HSIC_BB_DATA - @single_brd_lib.RADIO_MLB(i594_page 19)	26B3 26D8 29B3
50_HSIC1_STB	50_HSIC1_STB - @single_brd_lib.SINGLE_BRD	2C6 21B4
	50_HSIC_BB_STROBE - @single_brd_lib.RADIO_MLB(i594_page 19)	26B3 26C8 29B3
50_HSIC3_DATA	50_HSIC3_DATA - @single_brd_lib.SINGLE_BRD	2B6 21B4
	50_HSIC_WLAN_DATA - @single_brd_lib.RADIO_MLB(i594_page 19)	26B8 42B7
50_HSIC3_STB	50_HSIC3_STB - @single_brd_lib.SINGLE_BRD	2B6 21B4
	50_HSIC_WLAN_STROBE - @single_brd_lib.RADIO_MLB(i594_page 19)	26B8 42B7
90_BB_USB_N	90_BB_USB_N - @single_brd_lib.SINGLE_BRD	15B5 21C4
	90_BB_USB_D_N - @single_brd_lib.RADIO_MLB(i594_page 19)	26C3 26C8 29A5
90_BB_USB_P	90_BB_USB_P - @single_brd_lib.SINGLE_BRD	15C5 21C4
	90_BB_USB_D_P - @single_brd_lib.RADIO_MLB(i594_page 19)	26C3 26C8 29A5
90_CAM0_MIPI_CLK_CONN_N	90_CAM0_MIPI_CLK_CONN_N - @single_brd_lib.SINGLE_BRD	20C4
90_CAM0_MIPI_CLK_CONN_P	90_CAM0_MIPI_CLK_CONN_P - @single_brd_lib.SINGLE_BRD	20B4
90_CAM0_MIPI_CLK_N	90_CAM0_MIPI_CLK_N - @single_brd_lib.SINGLE_BRD	7C5 20C1
90_CAM0_MIPI_CLK_P	90_CAM0_MIPI_CLK_P - @single_brd_lib.SINGLE_BRD	7C5 20C1
90_CAM0_MIPI_DATA0_CONN_N	90_CAM0_MIPI_DATA0_CONN_N - @single_brd_lib.SINGLE_BRD	20C4
90_CAM0_MIPI_DATA0_CONN_P	90_CAM0_MIPI_DATA0_CONN_P - @single_brd_lib.SINGLE_BRD	20C4
90_CAM0_MIPI_DATA0_N	90_CAM0_MIPI_DATA0_N - @single_brd_lib.SINGLE_BRD	7D5 20C1
90_CAM0_MIPI_DATA0_P	90_CAM0_MIPI_DATA0_P - @single_brd_lib.SINGLE_BRD	7D5 20C1
90_CAM0_MIPI_DATA1_CONN_N	90_CAM0_MIPI_DATA1_CONN_N - @single_brd_lib.SINGLE_BRD	20C4
90_CAM0_MIPI_DATA1_CONN_P	90_CAM0_MIPI_DATA1_CONN_P - @single_brd_lib.SINGLE_BRD	20C4
90_CAM0_MIPI_DATA1_N	90_CAM0_MIPI_DATA1_N - @single_brd_lib.SINGLE_BRD	7D5 20C1
90_CAM0_MIPI_DATA1_P	90_CAM0_MIPI_DATA1_P - @single_brd_lib.SINGLE_BRD	7D5 20C1
90_CAM0_MIPI_DATA2_CONN_N	90_CAM0_MIPI_DATA2_CONN_N - @single_brd_lib.SINGLE_BRD	20B4
90_CAM0_MIPI_DATA2_CONN_P	90_CAM0_MIPI_DATA2_CONN_P - @single_brd_lib.SINGLE_BRD	20B4
90_CAM0_MIPI_DATA2_N	90_CAM0_MIPI_DATA2_N - @single_brd_lib.SINGLE_BRD	7C5 20B1
90_CAM0_MIPI_DATA2_P	90_CAM0_MIPI_DATA2_P - @single_brd_lib.SINGLE_BRD	7C5 20B1
90_CAM0_MIPI_DATA3_CONN_N	90_CAM0_MIPI_DATA3_CONN_N - @single_brd_lib.SINGLE_BRD	20B4
90_CAM0_MIPI_DATA3_CONN_P	90_CAM0_MIPI_DATA3_CONN_P - @single_brd_lib.SINGLE_BRD	20B4
90_CAM0_MIPI_DATA3_N	90_CAM0_MIPI_DATA3_N - @single_brd_lib.SINGLE_BRD	7C5 20B1
90_CAM0_MIPI_DATA3_P	90_CAM0_MIPI_DATA3_P - @single_brd_lib.SINGLE_BRD	7C5 20B1
90_CAM1_MIPI_CLK_CONN_N	90_CAM1_MIPI_CLK_CONN_N - @single_brd_lib.SINGLE_BRD	11C4
90_CAM1_MIPI_CLK_CONN_P	90_CAM1_MIPI_CLK_CONN_P - @single_brd_lib.SINGLE_BRD	11C4
90_CAM1_MIPI_CLK_N	90_CAM1_MIPI_CLK_N - @single_brd_lib.SINGLE_BRD	7C3 11D2
90_CAM1_MIPI_CLK_P	90_CAM1_MIPI_CLK_P - @single_brd_lib.SINGLE_BRD	7C3 11D2
90_CAM1_MIPI_DATA0_CONN_N	90_CAM1_MIPI_DATA0_CONN_N - @single_brd_lib.SINGLE_BRD	11C4
90_CAM1_MIPI_DATA0_CONN_P	90_CAM1_MIPI_DATA0_CONN_P - @single_brd_lib.SINGLE_BRD	11C4
90_CAM1_MIPI_DATA0_N	90_CAM1_MIPI_DATA0_N - @single_brd_lib.SINGLE_BRD	7C3 11C2
90_CAM1_MIPI_DATA0_P	90_CAM1_MIPI_DATA0_P - @single_brd_lib.SINGLE_BRD	7C3 11C2
90_CODEC_MIKEY_N	90_CODEC_MIKEY_N - @single_brd_lib.SINGLE_BRD	10C3
90_CODEC_MIKEY_P	90_CODEC_MIKEY_P - @single_brd_lib.SINGLE_BRD	10C3
90_E_CONN_PAIR1_N	90_E_CONN_PAIR1_N - @single_brd_lib.SINGLE_BRD	16C4 22C4
90_E_CONN_PAIR1_P	90_E_CONN_PAIR1_P - @single_brd_lib.SINGLE_BRD	16C4 22C4
90_E_CONN_PAIR2_N	90_E_CONN_PAIR2_N - @single_brd_lib.SINGLE_BRD	16C4 22C4
90_E_CONN_PAIR2_P	90_E_CONN_PAIR2_P - @single_brd_lib.SINGLE_BRD	16C4 22C4
90_E_PAIR1_N	90_E_PAIR1_N - @single_brd_lib.SINGLE_BRD	15B4 16B2
90_E_PAIR1_P	90_E_PAIR1_P - @single_brd_lib.SINGLE_BRD	15B4 16B2
90_E_PAIR2_N	90_E_PAIR2_N - @single_brd_lib.SINGLE_BRD	15B4 16B2
90_E_PAIR2_P	90_E_PAIR2_P - @single_brd_lib.SINGLE_BRD	15B4 16B2
90_LCM_MIPI_CLK_CONN_N	90_LCM_MIPI_CLK_CONN_N - @single_brd_lib.SINGLE_BRD	18C5
90_LCM_MIPI_CLK_CONN_P	90_LCM_MIPI_CLK_CONN_P - @single_brd_lib.SINGLE_BRD	18C5
90_LCM_MIPI_CLK_N	90_LCM_MIPI_CLK_N - @single_brd_lib.SINGLE_BRD	7C5 18C7
90_LCM_MIPI_CLK_P	90_LCM_MIPI_CLK_P - @single_brd_lib.SINGLE_BRD	7C5 18C7
90_LCM_MIPI_DATA0_CONN_N	90_LCM_MIPI_DATA0_CONN_N - @single_brd_lib.SINGLE_BRD	18C5
90_LCM_MIPI_DATA0_CONN_P	90_LCM_MIPI_DATA0_CONN_P - @single_brd_lib.SINGLE_BRD	18C5
90_LCM_MIPI_DATA0_N	90_LCM_MIPI_DATA0_N - @single_brd_lib.SINGLE_BRD	7C5 18C7
90_LCM_MIPI_DATA0_P	90_LCM_MIPI_DATA0_P - @single_brd_lib.SINGLE_BRD	7C5 18C7
90_LCM_MIPI_DATA1_CONN_N	90_LCM_MIPI_DATA1_CONN_N - @single_brd_lib.SINGLE_BRD	18C5
90_LCM_MIPI_DATA1_CONN_P	90_LCM_MIPI_DATA1_CONN_P - @single_brd_lib.SINGLE_BRD	18C5
90_LCM_MIPI_DATA1_N	90_LCM_MIPI_DATA1_N - @single_brd_lib.SINGLE_BRD	7C5 18C7
90_LCM_MIPI_DATA1_P	90_LCM_MIPI_DATA1_P - @single_brd_lib.SINGLE_BRD	7C5 18C7
90_LCM_MIPI_DATA2_CONN_N	90_LCM_MIPI_DATA2_CONN_N - @single_brd_lib.SINGLE_BRD	18B5
90_LCM_MIPI_DATA2_CONN_P	90_LCM_MIPI_DATA2_CONN_P - @single_brd_lib.SINGLE_BRD	18B5
90_LCM_MIPI_DATA2_N	90_LCM_MIPI_DATA2_N - @single_brd_lib.SINGLE_BRD	7C5 18B7
90_LCM_MIPI_DATA2_P	90_LCM_MIPI_DATA2_P - @single_brd_lib.SINGLE_BRD	7C5 18B7
90_LCM_MIPI_DATA3_CONN_N	90_LCM_MIPI_DATA3_CONN_N - @single_brd_lib.SINGLE_BRD	18B5
90_LCM_MIPI_DATA3_CONN_P	90_LCM_MIPI_DATA3_CONN_P - @single_brd_lib.SINGLE_BRD	18B5
90_LCM_MIPI_DATA3_N	90_LCM_MIPI_DATA3_N - @single_brd_lib.SINGLE_BRD	7C5 18B7
90_LCM_MIPI_DATA3_P	90_LCM_MIPI_DATA3_P - @single_brd_lib.SINGLE_BRD	7C5 18B7
90_MIKEY_DIG_N	90_MIKEY_DIG_N - @single_brd_lib.SINGLE_BRD	15C6
90_MIKEY_DIG_P	90_MIKEY_DIG_P - @single_brd_lib.SINGLE_BRD	15C6
90_MIKEY_TRISTAR_N	90_MIKEY_TRISTAR_N - @single_brd_lib.SINGLE_BRD	10C1 15C8
90_MIKEY_TRISTAR_P	90_MIKEY_TRISTAR_P - @single_brd_lib.SINGLE_BRD	10C1 15C8
90_USBHS_N	90_USBHS_N - @single_brd_lib.SINGLE_BRD	2B3 15B5
90_USBHS_P	90_USBHS_P - @single_brd_lib.SINGLE_BRD	2B3 15B5
90_USBHS_SOC_N	90_USBHS_SOC_N - @single_brd_lib.SINGLE_BRD	2B4
90_USBHS_SOC_P	90_USBHS_SOC_P - @single_brd_lib.SINGLE_BRD	2B4
ACCEL_INT1	ACCEL_INT1 - @single_brd_lib.SINGLE_BRD	3B5 14A5
ACCEL_INT1_FL	ACCEL_INT1_FL - @single_brd_lib.SINGLE_BRD	14A6 14B8
ACCEL_INT2_FL	ACCEL_INT2_FL - @single_brd_lib.SINGLE_BRD	14A6 14B8
ACCEL_INT2_L	ACCEL_INT2_L - @single_brd_lib.SINGLE_BRD	3A7 14A5
ACT_DIO	ACT_DIO - @single_brd_lib.SINGLE_BRD	12C6
ADC_LDO6_RUIM_1V8	ADC_LDO6_RUIM_1V8 - @single_brd_lib.SINGLE_BRD	13B6 21C4
	ADC_LDO6_RUIM_1V8 - @single_brd_lib.RADIO_MLB(i594_page 19)	26D5
ADC_LVS1	ADC_LVS1 - @single_brd_lib.SINGLE_BRD	13B6 21C4
	ADC_LVS1 - @single_brd_lib.RADIO_MLB(i594_page 19)	26D5
ADC_SMPS1_MSMC_1V05	ADC_SMPS1_MSMC_1V05 - @single_brd_lib.SINGLE_BRD	13C6 21C4
	ADC_SMPS1_MSMC_1V05 - @single_brd_lib.RADIO_MLB(i594_page 19)	26D5
ADC_SMPS3_MSME_1V8	ADC_SMPS3_MSME_1V8 - @single_brd_lib.SINGLE_BRD	13C6 21C4
	ADC_SMPS3_MSME_1V8 - @single_brd_lib.RADIO_MLB(i594_page 19)	26D5
ALS_INT_CONN_L	ALS_INT_CONN_L - @single_brd_lib.SINGLE_BRD	11C5
ALS_INT_L	ALS_INT_L - @single_brd_lib.SINGLE_BRD	3A7 11B8
AP_HSIC1_RDY	AP_HSIC1_RDY - @single_brd_lib.SINGLE_BRD	3B7 21A4
	AP_HSIC1_RDY - @single_brd_lib.RADIO_MLB(i594_page 19)	26B6 26C1 26D8 30B2
AP_HSIC3_RDY	AP_HSIC3_RDY - @single_brd_lib.SINGLE_BRD	3B5 21D1
	AP_HSIC3_RDY - @single_brd_lib.RADIO_MLB(i594_page 19)	26B8 42A4 42B3
AP_WAKE_MODEM	AP_WAKE_MODEM - @single_brd_lib.SINGLE_BRD	3A7 21B4
	AP_WAKE_MODEM - @single_brd_lib.RADIO_MLB(i594_page 19)	26D8 30B4
BATTERY_NTC	BATTERY_NTC - @single_brd_lib.SINGLE_BRD	12B7 21D5 22C8
BATTERY_NTC_CONN	BATTERY_NTC_CONN - @single_brd_lib.SINGLE_BRD	21D7 21D7
BATTERY_SNS	BATTERY_SNS - @single_brd_lib.SINGLE_BRD	12C6 21C6 22D8
BATTERY_SWI	BATTERY_SWI - @single_brd_lib.SINGLE_BRD	3A5 13B6 21D5
BATTERY_SWI_CONN	BATTERY_SWI_CONN - @single_brd_lib.SINGLE_BRD	21C7 21D7
BB_HSIC1_REMOTE_WAKE	BB_HSIC1_REMOTE_WAKE - @single_brd_lib.SINGLE_BRD	3B7 21C4
	BB_HSIC1_REMOTE_WAKE - @single_brd_lib.RADIO_MLB(i594_page 19)	26C8 30B2
BB_JTAG_TCK	BB_JTAG_TCK - @single_brd_lib.SINGLE_BRD	3B7 21D1
	BB_JTAG_TCK - @single_brd_lib.RADIO_MLB(i594_page 19)	26B8 26C3 29B5
BB_JTAG_TDI	BB_JTAG_TDI - @single_brd_lib.SINGLE_BRD	3B7 21D1
	BB_JTAG_TDI - @single_brd_lib.RADIO_MLB(i594_page 19)	26B8 26C3 29B5
BB_JTAG_TDO	BB_JTAG_TDO - @single_brd_lib.SINGLE_BRD	3B7 21D1
	BB_JTAG_TDO - @single_brd_lib.RADIO_MLB(i594_page 19)	26A8 26C3 29B3
BB_JTAG_TMS	BB_JTAG_TMS - @single_brd_lib.SINGLE_BRD	3B7 21D1
	BB_JTAG_TMS - @single_brd_lib.RADIO_MLB(i594_page 19)	26A8 26C3 29B5
BB_JTAG_TRST_L	BB_JTAG_TRST_L - @single_brd_lib.SINGLE_BRD	3A5 21D1
	BB_JTAG_TRST_L - @single_brd_lib.RADIO_MLB(i594_page 19)	26A8 26C3 29B5
BB_PP_SYNC	BB_PP_SYNC - @single_brd_lib.SINGLE_BRD	3A5 21C4
	PP_SYNC - @single_brd_lib.RADIO_MLB(i594_page 19)	26C8 30B2
BB_RESET_DET_L	BB_RESET_DET_L - @single_brd_lib.SINGLE_BRD	3A5 21D4
	RESET_DET_L - @single_brd_lib.RADIO_MLB(i594_page 19)	26C1 26D8 30B4
BB_RST_L	BB_RST_L - @single_brd_lib.SINGLE_BRD	3B7 21D4
	BB_RST_L - @single_brd_lib.RADIO_MLB(i594_page 19)	26C1 26D8 28C8 29B5
BB_RST_PMU_L	BB_RST_PMU_L - @single_brd_lib.SINGLE_BRD	13B7 21D4
	RESET_PMU_L - @single_brd_lib.RADIO_MLB(i594_page 19)	26D3 26D8 28C8
BB_RST_PMU_R_L	BB_RST_PMU_R_L - @single_brd_lib.SINGLE_BRD	13B6
BB_VBUS_DET	BB_VBUS_DET - @single_brd_lib.SINGLE_BRD	13B3 21C4
	BB_USB_VBUS - @single_brd_lib.RADIO_MLB(i594_page 19)	26C3 26C8 29A5
BB_WAKE_AP	BB_WAKE_AP - @single_brd_lib.SINGLE_BRD	13B6 21D4
	HOST_WAKE_BB - @single_brd_lib.RADIO_MLB(i594_page 19)	26C1 26D8 30B2
BEE_GEES	BEE_GEES - @single_brd_lib.SINGLE_BRD	3B7 14C6
BOARD_INFO	BOARD_INFO - @single_brd_lib.SINGLE_BRD	3A7 3A7 3B5 3C8
BOOST_EN	BOOST_EN - @single_brd_lib.SINGLE_BRD	17B2 17B5
BSYNC_GATE	BSYNC_GATE - @single_brd_lib.SINGLE_BRD	17A6
BT_REG_ON	BT_REG_ON - @single_brd_lib.SINGLE_BRD	13B7 21C4
	BT_REG_ON - @single_brd_lib.RADIO_MLB(i594_page 19)	26B8 26C1 42C7
BT_REG_ON_R	BT_REG_ON_R - @single_brd_lib.SINGLE_BRD	13B6
BT_WAKE	BT_WAKE - @single_brd_lib.SINGLE_BRD	3B7 21B4
	BT_WAKE - @single_brd_lib.RADIO_MLB(i594_page 19)	26B8 26D1 42C3
BUCK0A_FB	BUCK0A_FB - @single_brd_lib.SINGLE_BRD	12C5
BUCK0A_LXL	BUCK0A_LXL - @single_brd_lib.SINGLE_BRD	12C5
BUCK0A_LXM	BUCK0A_LXM - @single_brd_lib.SINGLE_BRD	12C5
BUCK0B_FB	BUCK0B_FB - @single_brd_lib.SINGLE_BRD	12C5
BUCK0B_LXL	BUCK0B_LXL - @single_brd_lib.SINGLE_BRD	12C5
BUCK0B_LXM	BUCK0B_LXM - @single_brd_lib.SINGLE_BRD	12C5
BUCK0C_FB	BUCK0C_FB - @single_brd_lib.SINGLE_BRD	12C5
BUCK0C_LX	BUCK0C_LX - @single_brd_lib.SINGLE_BRD	12C5
BUCK2_FB	BUCK2_FB - @single_brd_lib.SINGLE_BRD	5A3 12C5
BUCK2_LXL	BUCK2_LXL - @single_brd_lib.SINGLE_BRD	12C5
BUCK2_LXM	BUCK2_LXM - @single_brd_lib.SINGLE_BRD	12C5
BUCK2_LXR	BUCK2_LXR - @single_brd_lib.SINGLE_BRD	12C5
BUCK3_FB	BUCK3_FB - @single_brd_lib.SINGLE_BRD	12B5
BUCK3_LX	BUCK3_LX - @single_brd_lib.SINGLE_BRD	12B5
BUCK4_FB	BUCK4_FB - @single_brd_lib.SINGLE_BRD	12B5
BUCK4_LXL	BUCK4_LXL - @single_brd_lib.SINGLE_BRD	12B5
BUCK4_LXM	BUCK4_LXM - @single_brd_lib.SINGLE_BRD	12B5
CAM0_CLK_CONN	CAM0_CLK_CONN - @single_brd_lib.SINGLE_BRD	20C5
CAM0_I2C_SCL	CAM0_I2C_SCL - @single_brd_lib.SINGLE_BRD	7D1 19C6 20C7
CAM0_I2C_SCL_CONN	CAM0_I2C_SCL_CONN - @single_brd_lib.SINGLE_BRD	20B5
CAM0_I2C_SDA	CAM0_I2C_SDA - @single_brd_lib.SINGLE_BRD	7D1 19C6 20C7
CAM0_I2C_SDA_CONN	CAM0_I2C_SDA_CONN - @single_brd_lib.SINGLE_BRD	20B5
CAM0_SHUTDOWN	CAM0_SHUTDOWN - @single_brd_lib.SINGLE_BRD	7C3 20C7
CAM0_SHUTDOWN_CONN	CAM0_SHUTDOWN_CONN - @single_brd_lib.SINGLE_BRD	20C5
CAM0_STROBE_EN	CAM0_STROBE_EN - @single_brd_lib.SINGLE_BRD	19C6 20C7
CAM0_STROBE_EN_CONN	CAM0_STROBE_EN_CONN - @single_brd_lib.SINGLE_BRD	20B5
CAM0_STROBE_NTC	CAM0_STROBE_NTC - @single_brd_lib.SINGLE_BRD	19C5 20A7
CAM0_STROBE_NTC_CONN	CAM0_STROBE_NTC_CONN - @single_brd_lib.SINGLE_BRD	20B4
CAM0_TORCH	CAM0_TORCH - @single_brd_lib.SINGLE_BRD	7D1 19C6
CAM0_VDDCORE_EN	CAM0_VDDCORE_EN - @single_brd_lib.SINGLE_BRD	3A5 20B7
CAM1_CLK_CONN	CAM1_CLK_CONN - @single_brd_lib.SINGLE_BRD	11C4
CAM1_I2C_SCL	CAM1_I2C_SCL - @single_brd_lib.SINGLE_BRD	7D2 11D8
CAM1_I2C_SCL_CONN	CAM1_I2C_SCL_CONN - @single_brd_lib.SINGLE_BRD	11C5
CAM1_I2C_SDA	CAM1_I2C_SDA - @single_brd_lib.SINGLE_BRD	7C2 11C8
CAM1_I2C_SDA_CONN	CAM1_I2C_SDA_CONN - @single_brd_lib.SINGLE_BRD	11C5
CAM1_SHUTDOWN	CAM1_SHUTDOWN - @single_brd_lib.SINGLE_BRD	7C3 11D8
CAM1_SHUTDOWN_CONN_L	CAM1_SHUTDOWN_CONN_L - @single_brd_lib.SINGLE_BRD	11C5
CLK32K_GRAPE_RESET_SOC_L	CLK32K_GRAPE_RESET_SOC_L - @single_brd_lib.SINGLE_BRD	3B5 17B7
CLK32K_WIFI	CLK32K_WIFI - @single_brd_lib.SINGLE_BRD	13B6 13C6 21B4
	CLK32K_AP - @single_brd_lib.RADIO_MLB(i594_page 19)	26C8 42A4 42C8
CODEC_HPHONE_DET	CODEC_HPHONE_DET - @single_brd_lib.SINGLE_BRD	10B5 16D8
CODEC_HS3	CODEC_HS3 - @single_brd_lib.SINGLE_BRD	10B4 10B6 16C8
CODEC_HS3_REF	CODEC_HS3_REF - @single_brd_lib.SINGLE_BRD	10B4 10B4
CODEC_HS4	CODEC_HS4 - @single_brd_lib.SINGLE_BRD	10A6 10B4 16C8
CODEC_HS4_REF	CODEC_HS4_REF - @single_brd_lib.SINGLE_BRD	10A4 10B4
CODEC_INT_L	CODEC_INT_L - @single_brd_lib.SINGLE_BRD	3A7 9B2
CODEC_LDO_EN	CODEC_LDO_EN - @single_brd_lib.SINGLE_BRD	10D2
CODEC_RESET_L	CODEC_RESET_L - @single_brd_lib.SINGLE_BRD	9B2
CODEC_SPI_CLK	CODEC_SPI_CLK - @single_brd_lib.SINGLE_BRD	3B5 9B2
CODEC_SPI_CS	CODEC_SPI_CS - @single_brd_lib.SINGLE_BRD	3B5 9B2
CODEC_SPI_DIN	CODEC_SPI_DIN - @single_brd_lib.SINGLE_BRD	3B5 9B2
CODEC_SPI_DOUT	CODEC_SPI_DOUT - @single_brd_lib.SINGLE_BRD	3B5 9B2
COMPASS_INT_2	COMPASS_INT_2 - @single_brd_lib.SINGLE_BRD	3A7 14A5
COMP_INT_2	COMP_INT_2 - @single_brd_lib.SINGLE_BRD	14A6 14A7
CPU0_SENSE	CPU0_SENSE - @single_brd_lib.SINGLE_BRD	5D7
CPU0_SWITCH	CPU0_SWITCH - @single_brd_lib.SINGLE_BRD	2B4 12C5
CPU0_SW_CONTROL	CPU0_SW_CONTROL - @single_brd_lib.SINGLE_BRD	12C5
CPU0_SW_S	CPU0_SW_S - @single_brd_lib.SINGLE_BRD	5D8 12C5
CPU1_SENSE	CPU1_SENSE - @single_brd_lib.SINGLE_BRD	5C7
CPU1_SWITCH	CPU1_SWITCH - @single_brd_lib.SINGLE_BRD	2B4 12C5
CPU1_SW_CONTROL	CPU1_SW_CONTROL - @single_brd_lib.SINGLE_BRD	12C5
CPU1_SW_S	CPU1_SW_S - @single_brd_lib.SINGLE_BRD	5C8 12C5
CUMULUS_IN<0>	CUMULUS_IN<0> - @single_brd_lib.SINGLE_BRD	17C2 17C7
CUMULUS_IN<1>	CUMULUS_IN<1> - @single_brd_lib.SINGLE_BRD	17C7 17D2
CUMULUS_IN<2>	CUMULUS_IN<2> - @single_brd_lib.SINGLE_BRD	17C7 17D2
CUMULUS_IN<3>	CUMULUS_IN<3> - @single_brd_lib.SINGLE_BRD	17C7 17D2

思源电子 sydzi.taobao.com 为您提供维修手机.笔记本.电脑图纸

CUMULUS_IN<4>	CUMULUS_IN<4> - @single_brd_lib.SINGLE_BRD	17C7 17D2
CUMULUS_IN<5>	CUMULUS_IN<5> - @single_brd_lib.SINGLE_BRD	17C2 17C7
CUMULUS_IN<6>	CUMULUS_IN<6> - @single_brd_lib.SINGLE_BRD	17C7 17D2
CUMULUS_IN<7>	CUMULUS_IN<7> - @single_brd_lib.SINGLE_BRD	17C2 17C7
CUMULUS_IN<8>	CUMULUS_IN<8> - @single_brd_lib.SINGLE_BRD	17C2 17C7
CUMULUS_IN<9>	CUMULUS_IN<9> - @single_brd_lib.SINGLE_BRD	17C2 17C7
CUMULUS_IN<10>	CUMULUS_IN<10> - @single_brd_lib.SINGLE_BRD	17C7 17D2
CUMULUS_IN<11>	CUMULUS_IN<11> - @single_brd_lib.SINGLE_BRD	17C2 17C7
CUMULUS_IN<12>	CUMULUS_IN<12> - @single_brd_lib.SINGLE_BRD	17C2 17C7
CUMULUS_IN<13>	CUMULUS_IN<13> - @single_brd_lib.SINGLE_BRD	17C2 17C7
CUMULUS_IN<14>	CUMULUS_IN<14> - @single_brd_lib.SINGLE_BRD	17C2 17C7
CUMULUS_PROX_RX	CUMULUS_PROX_RX - @single_brd_lib.SINGLE_BRD	17C7
CUMULUS_VDDANA	CUMULUS_VDDANA - @single_brd_lib.SINGLE_BRD	17D7
CUMULUS_VDDCORE	CUMULUS_VDDCORE - @single_brd_lib.SINGLE_BRD	17D7
CUMULUS_VSTM_OUT<0>	CUMULUS_VSTM_OUT<0> - @single_brd_lib.SINGLE_BRD	17C3 17C5
CUMULUS_VSTM_OUT<1>	CUMULUS_VSTM_OUT<1> - @single_brd_lib.SINGLE_BRD	17B3 17C5
CUMULUS_VSTM_OUT<2>	CUMULUS_VSTM_OUT<2> - @single_brd_lib.SINGLE_BRD	17C3 17C5
CUMULUS_VSTM_OUT<3>	CUMULUS_VSTM_OUT<3> - @single_brd_lib.SINGLE_BRD	17C3 17C5
CUMULUS_VSTM_OUT<4>	CUMULUS_VSTM_OUT<4> - @single_brd_lib.SINGLE_BRD	17C3 17C5
CUMULUS_VSTM_OUT<5>	CUMULUS_VSTM_OUT<5> - @single_brd_lib.SINGLE_BRD	17C3 17C5
CUMULUS_VSTM_OUT<6>	CUMULUS_VSTM_OUT<6> - @single_brd_lib.SINGLE_BRD	17C3 17C5
CUMULUS_VSTM_OUT<7>	CUMULUS_VSTM_OUT<7> - @single_brd_lib.SINGLE_BRD	17C3 17C5
CUMULUS_VSTM_OUT<8>	CUMULUS_VSTM_OUT<8> - @single_brd_lib.SINGLE_BRD	17C3 17C5
CUMULUS_VSTM_OUT<9>	CUMULUS_VSTM_OUT<9> - @single_brd_lib.SINGLE_BRD	17C5
CUMULUS_VSTM_OUT<10>	CUMULUS_VSTM_OUT<10> - @single_brd_lib.SINGLE_BRD	17C5
CUMULUS_VSTM_OUT<11>	CUMULUS_VSTM_OUT<11> - @single_brd_lib.SINGLE_BRD	17B3 17C5
CUMULUS_VSTM_OUT<12>	CUMULUS_VSTM_OUT<12> - @single_brd_lib.SINGLE_BRD	17B3 17C5
CUMULUS_VSTM_OUT<13>	CUMULUS_VSTM_OUT<13> - @single_brd_lib.SINGLE_BRD	17C3 17C5
CUMULUS_VSTM_OUT<14>	CUMULUS_VSTM_OUT<14> - @single_brd_lib.SINGLE_BRD	17C3 17C5
CUMULUS_VSTM_OUT<15>	CUMULUS_VSTM_OUT<15> - @single_brd_lib.SINGLE_BRD	17C3 17C5
CUMULUS_VSTM_OUT<16>	CUMULUS_VSTM_OUT<16> - @single_brd_lib.SINGLE_BRD	17C3 17C5
CUMULUS_VSTM_OUT<17>	CUMULUS_VSTM_OUT<17> - @single_brd_lib.SINGLE_BRD	17B5 17C3
CUMULUS_VSTM_OUT<18>	CUMULUS_VSTM_OUT<18> - @single_brd_lib.SINGLE_BRD	17B5 17C3
CUMULUS_VSTM_OUT<19>	CUMULUS_VSTM_OUT<19> - @single_brd_lib.SINGLE_BRD	17B5 17C3
DDR0_VREF_CA	DDR0_VREF_CA - @single_brd_lib.SINGLE_BRD	4A7 4D6
DDR0_VREF_DQ	DDR0_VREF_DQ - @single_brd_lib.SINGLE_BRD	4A5 4D6
DDR0_ZQ	DDR0_ZQ - @single_brd_lib.SINGLE_BRD	4D6 4D6
DDR1_VREF_CA	DDR1_VREF_CA - @single_brd_lib.SINGLE_BRD	4A6 4D6
DDR1_VREF_DQ	DDR1_VREF_DQ - @single_brd_lib.SINGLE_BRD	4A4 4D6
DDR1_ZQ	DDR1_ZQ - @single_brd_lib.SINGLE_BRD	4D6 4D6
DEV_HSIC3_RDY	DEV_HSIC3_RDY - @single_brd_lib.SINGLE_BRD	3B5 21D1
	DEV_HSIC3_RDY - @single_brd_lib.RADIO_MLB(i594_page 19)	26B8 42A4 42A6
DISCHARGE_R	DISCHARGE_R - @single_brd_lib.SINGLE_BRD	19B3
DIS_CONTROL	DIS_CONTROL - @single_brd_lib.SINGLE_BRD	19B4
DIS_GATE	DIS_GATE - @single_brd_lib.SINGLE_BRD	19B4
DIS_NODE	DIS_NODE - @single_brd_lib.SINGLE_BRD	19A4
DIS_RC	DIS_RC - @single_brd_lib.SINGLE_BRD	19A5
DIS_RESET	DIS_RESET - @single_brd_lib.SINGLE_BRD	19B5
DUMP_GATE	DUMP_GATE - @single_brd_lib.SINGLE_BRD	19B7
DWI_AP_DI	DWI_AP_DI - @single_brd_lib.SINGLE_BRD	3D3 13B7
EXT_MIC_BIAS	EXT_MIC_BIAS - @single_brd_lib.SINGLE_BRD	10C6
EXT_MIC_BIAS_FILT	EXT_MIC_BIAS_FILT - @single_brd_lib.SINGLE_BRD	10B6
EXT_MIC_BIAS_FILT_IN	EXT_MIC_BIAS_FILT_IN - @single_brd_lib.SINGLE_BRD	10B6
EXT_MIC_BIAS_IN	EXT_MIC_BIAS_IN - @single_brd_lib.SINGLE_BRD	10C6
EXT_MIC_CODEC_N	EXT_MIC_CODEC_N - @single_brd_lib.SINGLE_BRD	10C6
EXT_MIC_CODEC_P	EXT_MIC_CODEC_P - @single_brd_lib.SINGLE_BRD	10C6
EXT_MIC_CONN_N	EXT_MIC_CONN_N - @single_brd_lib.SINGLE_BRD	10B7
EXT_MIC_CONN_P	EXT_MIC_CONN_P - @single_brd_lib.SINGLE_BRD	10A7
EXT_MIC_N	EXT_MIC_N - @single_brd_lib.SINGLE_BRD	10C7
EXT_MIC_P	EXT_MIC_P - @single_brd_lib.SINGLE_BRD	10C7
E_ACC1	E_ACC1 - @single_brd_lib.SINGLE_BRD	15C4 16A3
E_ACC1_CONN	E_ACC1_CONN - @single_brd_lib.SINGLE_BRD	16B4 22B4
E_ACC2	E_ACC2 - @single_brd_lib.SINGLE_BRD	15C4 16A3

E_ACC2_CONN	E_ACC2_CONN - @single_brd_lib.SINGLE_BRD	16B4 22B4
E_CONN_DETECT	E_CONN_DETECT - @single_brd_lib.SINGLE_BRD	16C4 22B5
E_CONN_TP	E_CONN_TP - @single_brd_lib.SINGLE_BRD	22B4
E_DETECT	E_DETECT - @single_brd_lib.SINGLE_BRD	13C2 15B4 16B2
FLASH_ENABLE	FLASH_ENABLE - @single_brd_lib.SINGLE_BRD	3B5 19C7
FMI0_ALE	FMI0_ALE - @single_brd_lib.SINGLE_BRD	6B7 6C3
FMI0_CEN0	FMI0_CEN0 - @single_brd_lib.SINGLE_BRD	6C3 6C8
FMI0_CLE	FMI0_CLE - @single_brd_lib.SINGLE_BRD	6B7 6C3
FMI0_DQVREF	FMI0_DQVREF - @single_brd_lib.SINGLE_BRD	6B3 6B6 6B6 6B7 6B7 6C5
FMI0_IO<0>	FMI0_IO<0> - @single_brd_lib.SINGLE_BRD	6B6 6C4 6C8
FMI0_IO<1>	FMI0_IO<1> - @single_brd_lib.SINGLE_BRD	6C4 6C8
FMI0_IO<2>	FMI0_IO<2> - @single_brd_lib.SINGLE_BRD	6C4 6C8
FMI0_IO<3>	FMI0_IO<3> - @single_brd_lib.SINGLE_BRD	6C4 6C8
FMI0_IO<4>	FMI0_IO<4> - @single_brd_lib.SINGLE_BRD	6C4 6C8
FMI0_IO<5>	FMI0_IO<5> - @single_brd_lib.SINGLE_BRD	6C4 6C8
FMI0_IO<6>	FMI0_IO<6> - @single_brd_lib.SINGLE_BRD	6C4 6C8
FMI0_IO<7>	FMI0_IO<7> - @single_brd_lib.SINGLE_BRD	6C4 6C8
FMI0_WE_L	FMI0_WE_L - @single_brd_lib.SINGLE_BRD	6B7 6C3
FMI1_ALE	FMI1_ALE - @single_brd_lib.SINGLE_BRD	6B6 6C3
FMI1_CEN0	FMI1_CEN0 - @single_brd_lib.SINGLE_BRD	6C3 6C6
FMI1_CLE	FMI1_CLE - @single_brd_lib.SINGLE_BRD	6B6 6C3
FMI1_IO<0>	FMI1_IO<0> - @single_brd_lib.SINGLE_BRD	6C5
FMI1_IO<1>	FMI1_IO<1> - @single_brd_lib.SINGLE_BRD	6C5
FMI1_IO<2>	FMI1_IO<2> - @single_brd_lib.SINGLE_BRD	6C5
FMI1_IO<3>	FMI1_IO<3> - @single_brd_lib.SINGLE_BRD	6C5
FMI1_IO<4>	FMI1_IO<4> - @single_brd_lib.SINGLE_BRD	6C5
FMI1_IO<5>	FMI1_IO<5> - @single_brd_lib.SINGLE_BRD	6C5
FMI1_IO<6>	FMI1_IO<6> - @single_brd_lib.SINGLE_BRD	6C5
FMI1_IO<7>	FMI1_IO<7> - @single_brd_lib.SINGLE_BRD	6C5
FMI1_WE_L	FMI1_WE_L - @single_brd_lib.SINGLE_BRD	6B6 6C3
FORCE_DFU	FORCE_DFU - @single_brd_lib.SINGLE_BRD	3A7 22B8
GCM_SEL	GCM_SEL - @single_brd_lib.SINGLE_BRD	17B2 17B5
GRAPE_INT_L	GRAPE_INT_L - @single_brd_lib.SINGLE_BRD	3B7 17B8
GRAPE_RESET_L	GRAPE_RESET_L - @single_brd_lib.SINGLE_BRD	3A7 17B7
GYRO_INT1	GYRO_INT1 - @single_brd_lib.SINGLE_BRD	3A7 14B3
GYRO_INT2	GYRO_INT2 - @single_brd_lib.SINGLE_BRD	3B5 14B3
GYRO_PUMP	GYRO_PUMP - @single_brd_lib.SINGLE_BRD	14B2
HIFA_BUFF_INV	HIFA_BUFF_INV - @single_brd_lib.SINGLE_BRD	17A2
HOLD_KEY_BUFF_L	HOLD_KEY_BUFF_L - @single_brd_lib.SINGLE_BRD	3A3 3B7 13C4 13C6
HOLD_KEY_CONN_L	HOLD_KEY_CONN_L - @single_brd_lib.SINGLE_BRD	8B5
HOLD_KEY_L	HOLD_KEY_L - @single_brd_lib.SINGLE_BRD	3A4 8B7
HOST_RESET	HOST_RESET - @single_brd_lib.SINGLE_BRD	13A7 15B3
HOST_WAKE_BT	HOST_WAKE_BT - @single_brd_lib.SINGLE_BRD	13B6 21B4
	HOST_WAKE_BT - @single_brd_lib.RADIO_MLB(i594_page 19)	26B8 42C3
HOST_WAKE_WLAN	HOST_WAKE_WLAN - @single_brd_lib.SINGLE_BRD	13B6 21B4
	HOST_WAKE_WLAN - @single_brd_lib.RADIO_MLB(i594_page 19)	26B8 42A4 42B3
HPHONE_DET_CONN	HPHONE_DET_CONN - @single_brd_lib.SINGLE_BRD	16C5
HPHONE_L	HPHONE_L - @single_brd_lib.SINGLE_BRD	10B1 16D2
HPHONE_L_CONN	HPHONE_L_CONN - @single_brd_lib.SINGLE_BRD	16C4
HPHONE_R	HPHONE_R - @single_brd_lib.SINGLE_BRD	10B1 16D2
HPHONE_R_CONN	HPHONE_R_CONN - @single_brd_lib.SINGLE_BRD	16C4
HPHONE_TEST	HPHONE_TEST - @single_brd_lib.SINGLE_BRD	10C6 16D2
HS3_CONN	HS3_CONN - @single_brd_lib.SINGLE_BRD	16C5 22A6
HS3_CONTROL	HS3_CONTROL - @single_brd_lib.SINGLE_BRD	3A7 16C8
HS3_CONTROL_CONN	HS3_CONTROL_CONN - @single_brd_lib.SINGLE_BRD	16C5
HS3_REF	HS3_REF - @single_brd_lib.SINGLE_BRD	10B4 16C8
HS3_REF_CONN	HS3_REF_CONN - @single_brd_lib.SINGLE_BRD	16C5
HS4_CONN	HS4_CONN - @single_brd_lib.SINGLE_BRD	16C5 22A6
HS4_CONTROL	HS4_CONTROL - @single_brd_lib.SINGLE_BRD	3A7 16C8
HS4_CONTROL_CONN	HS4_CONTROL_CONN - @single_brd_lib.SINGLE_BRD	16C5
HS4_REF	HS4_REF - @single_brd_lib.SINGLE_BRD	10A4 16D8

HS4_REF_CONN	HS4_REF_CONN - @single_brd_lib.SINGLE_BRD	16C4 16D5
I2C0_SCL_1V8	I2C0_SCL_1V8 - @single_brd_lib.SINGLE_BRD	3D2 13A4 13B6 14B1 14D6 15B4
I2C0_SDA_1V8	I2C0_SDA_1V8 - @single_brd_lib.SINGLE_BRD	3D2 13A4 13B6 14B1 14D6 15B4
I2C1_SCL_1V8	I2C1_SCL_1V8 - @single_brd_lib.SINGLE_BRD	3D2 14A5
I2C1_SDA_1V8	I2C1_SDA_1V8 - @single_brd_lib.SINGLE_BRD	3D2 14A5
I2C2_SCL_1V8	I2C2_SCL_1V8 - @single_brd_lib.SINGLE_BRD	3D2 11B8
I2C2_SDA_1V8	I2C2_SDA_1V8 - @single_brd_lib.SINGLE_BRD	3D2 11B8
I2C_SCL_ALS	I2C_SCL_ALS - @single_brd_lib.SINGLE_BRD	11C5
I2C_SCL_COMP	I2C_SCL_COMP - @single_brd_lib.SINGLE_BRD	14A6 14A7 14B6
I2C_SDA_ALS	I2C_SDA_ALS - @single_brd_lib.SINGLE_BRD	11C5
I2C_SDA_COMP	I2C_SDA_COMP - @single_brd_lib.SINGLE_BRD	14A6 14A7 14B6
I2S0_DIN	I2S0_DIN - @single_brd_lib.SINGLE_BRD	3D4 9C2
I2S0_DOUT	I2S0_DOUT - @single_brd_lib.SINGLE_BRD	3D4 9C2
I2S0_LRCLK	I2S0_LRCLK - @single_brd_lib.SINGLE_BRD	3D4 9C2
I2S1_DIN	I2S1_DIN - @single_brd_lib.SINGLE_BRD	3D4 21C4
	BB_I2S_TXD - @single_brd_lib.RADIO_MLB(i594_page 19)	26C8 30B4
I2S1_DOUT	I2S1_DOUT - @single_brd_lib.SINGLE_BRD	3D4 21C4
	BB_I2S_RXD - @single_brd_lib.RADIO_MLB(i594_page 19)	26C8 30B4
I2S1_LRCLK	I2S1_LRCLK - @single_brd_lib.SINGLE_BRD	3D4 21C4
	BB_I2S_WS - @single_brd_lib.RADIO_MLB(i594_page 19)	26C8 30B4
I2S2_DIN	I2S2_DIN - @single_brd_lib.SINGLE_BRD	3D4 9B2 14C5
I2S2_DOUT	I2S2_DOUT - @single_brd_lib.SINGLE_BRD	3D4 9C2 14C5
I2S2_LRCLK	I2S2_LRCLK - @single_brd_lib.SINGLE_BRD	3D4 9C2 14C5
I2S3_DIN	I2S3_DIN - @single_brd_lib.SINGLE_BRD	3C4 21B4
	BT_PCM_OUT - @single_brd_lib.RADIO_MLB(i594_page 19)	26B8 42B3
I2S3_DOUT	I2S3_DOUT - @single_brd_lib.SINGLE_BRD	3C4 21B4
	BT_PCM_IN - @single_brd_lib.RADIO_MLB(i594_page 19)	26B8 42B3
I2S3_LRCLK	I2S3_LRCLK - @single_brd_lib.SINGLE_BRD	3C4 21B4
	BT_PCM_SYNC - @single_brd_lib.RADIO_MLB(i594_page 19)	26B8 42B3
I2S4_DIN	I2S4_DIN - @single_brd_lib.SINGLE_BRD	3C4 9C2
I2S4_DOUT	I2S4_DOUT - @single_brd_lib.SINGLE_BRD	3C4 9C2
I2S4_LRCLK	I2S4_LRCLK - @single_brd_lib.SINGLE_BRD	3C4 9C2
ID_N42	ID_N42 - @single_brd_lib.SINGLE_BRD	3C4 3C8
INT_MIC1_BIAS	INT_MIC1_BIAS - @single_brd_lib.SINGLE_BRD	9C6 16C2
INT_MIC1_BIAS_FILT	INT_MIC1_BIAS_FILT - @single_brd_lib.SINGLE_BRD	9C6
INT_MIC1_CODEC_N	INT_MIC1_CODEC_N - @single_brd_lib.SINGLE_BRD	9C6
INT_MIC1_CODEC_P	INT_MIC1_CODEC_P - @single_brd_lib.SINGLE_BRD	9C6
INT_MIC1_CONN_BIAS	INT_MIC1_CONN_BIAS - @single_brd_lib.SINGLE_BRD	16C4 16C5
INT_MIC1_CONN_N	INT_MIC1_CONN_N - @single_brd_lib.SINGLE_BRD	16C3
INT_MIC1_CONN_P	INT_MIC1_CONN_P - @single_brd_lib.SINGLE_BRD	16C4 16C5 22C6
INT_MIC1_N	INT_MIC1_N - @single_brd_lib.SINGLE_BRD	9C8 16C2
INT_MIC1_P	INT_MIC1_P - @single_brd_lib.SINGLE_BRD	9C8 16C2
INT_MIC1_RET	INT_MIC1_RET - @single_brd_lib.SINGLE_BRD	9C8 16C2
INT_MIC2_3_BIAS	INT_MIC2_3_BIAS - @single_brd_lib.SINGLE_BRD	8B2 9C6 11A2
INT_MIC2_BIAS_CONN	INT_MIC2_BIAS_CONN - @single_brd_lib.SINGLE_BRD	8B5
INT_MIC2_BIAS_FILT	INT_MIC2_BIAS_FILT - @single_brd_lib.SINGLE_BRD	9C6
INT_MIC2_CODEC_N	INT_MIC2_CODEC_N - @single_brd_lib.SINGLE_BRD	9C6
INT_MIC2_CODEC_P	INT_MIC2_CODEC_P - @single_brd_lib.SINGLE_BRD	9C6
INT_MIC2_CONN_N	INT_MIC2_CONN_N - @single_brd_lib.SINGLE_BRD	8B5
INT_MIC2_CONN_P	INT_MIC2_CONN_P - @single_brd_lib.SINGLE_BRD	8B5 22C6
INT_MIC2_N	INT_MIC2_N - @single_brd_lib.SINGLE_BRD	8B2 9C7
INT_MIC2_P	INT_MIC2_P - @single_brd_lib.SINGLE_BRD	8B2 9C7
INT_MIC2_RET	INT_MIC2_RET - @single_brd_lib.SINGLE_BRD	8B4
INT_MIC3_BIAS_CONN	INT_MIC3_BIAS_CONN - @single_brd_lib.SINGLE_BRD	11C4
INT_MIC3_CODEC_N	INT_MIC3_CODEC_N - @single_brd_lib.SINGLE_BRD	9B6
INT_MIC3_CODEC_P	INT_MIC3_CODEC_P - @single_brd_lib.SINGLE_BRD	9C6
INT_MIC3_CONN_N	INT_MIC3_CONN_N - @single_brd_lib.SINGLE_BRD	11B3
INT_MIC3_CONN_P	INT_MIC3_CONN_P - @single_brd_lib.SINGLE_BRD	11B3 22C6
INT_MIC3_N	INT_MIC3_N - @single_brd_lib.SINGLE_BRD	9B7 11B2
INT_MIC3_P	INT_MIC3_P -	9B7 11B2

	@single_brd_lib.SINGLE_BRD	
INT_MIC3_RET	INT_MIC3_RET - @single_brd_lib.SINGLE_BRD	11C4
IREF	IREF - @single_brd_lib.SINGLE_BRD	13C5
IRLED_DRAIN	IRLED_DRAIN - @single_brd_lib.SINGLE_BRD	11C4
IRLED_K	IRLED_K - @single_brd_lib.SINGLE_BRD	11C4
JTAG_SWCLK	JTAG_SWCLK - @single_brd_lib.SINGLE_BRD	2B6 15B5
JTAG_SWDIO	JTAG_SWDIO - @single_brd_lib.SINGLE_BRD	2B6 15B5
KEEPACT	KEEPACT - @single_brd_lib.SINGLE_BRD	3B7 13C2
L19_FILT	L19_FILT - @single_brd_lib.SINGLE_BRD	14D4
L19_IREF	L19_IREF - @single_brd_lib.SINGLE_BRD	14C4
L19_LDO_FILT	L19_LDO_FILT - @single_brd_lib.SINGLE_BRD	14D4
L19_SES_N	L19_SES_N - @single_brd_lib.SINGLE_BRD	14D4
L19_SES_P	L19_SES_P - @single_brd_lib.SINGLE_BRD	14D4
L19_SWITCH	L19_SWITCH - @single_brd_lib.SINGLE_BRD	14D6
L19_VSENSE_N	L19_VSENSE_N - @single_brd_lib.SINGLE_BRD	14D4
L19_VSENSE_P	L19_VSENSE_P - @single_brd_lib.SINGLE_BRD	14D4
L65_FILT+	L65_FILT+ - @single_brd_lib.SINGLE_BRD	10B4
L65_VCPFILT+	L65_VCPFILT+ - @single_brd_lib.SINGLE_BRD	10C4
L65_VCPFILT-	L65_VCPFILT- - @single_brd_lib.SINGLE_BRD	10C4
LAT_SW1_CTL	LAT_SW1_CTL - @single_brd_lib.SINGLE_BRD	16C5 21A4
	LAT_SW1_CTL - @single_brd_lib.RADIO_MLB(i594_page 19)	26B8 26C1 30C2
LCD_BL_CA	LCD_BL_CA - @single_brd_lib.SINGLE_BRD	13B1 18D1
LCD_BL_CA_CONN	LCD_BL_CA_CONN - @single_brd_lib.SINGLE_BRD	18C4 22D4
LCD_BL_CC1	LCD_BL_CC1 - @single_brd_lib.SINGLE_BRD	13A2 18D1
LCD_BL_CC1_CONN	LCD_BL_CC1_CONN - @single_brd_lib.SINGLE_BRD	18C4 22D4
LCD_BL_CC2	LCD_BL_CC2 - @single_brd_lib.SINGLE_BRD	13A2 18D1
LCD_BL_CC2_CONN	LCD_BL_CC2_CONN - @single_brd_lib.SINGLE_BRD	18C4 22D4
LCD_DESENSE	LCD_DESENSE - @single_brd_lib.SINGLE_BRD	13A2
LCD_DESENSE_CONN	LCD_DESENSE_CONN - @single_brd_lib.SINGLE_BRD	18D4
LCD_HIFA_BSYNC	LCD_HIFA_BSYNC - @single_brd_lib.SINGLE_BRD	3B7 17A1 17B2 18B1
LCD_HIFA_BSYNC_BUFF	LCD_HIFA_BSYNC_BUFF - @single_brd_lib.SINGLE_BRD	17A3 17B5
LCD_HIFA_BSYNC_CONN	LCD_HIFA_BSYNC_CONN - @single_brd_lib.SINGLE_BRD	18C4
LCD_PANIC_L_CONN	LCD_PANIC_L_CONN - @single_brd_lib.SINGLE_BRD	18C4
LCD_PIFA	LCD_PIFA - @single_brd_lib.SINGLE_BRD	18C4
LCD_PIFA_R	LCD_PIFA_R - @single_brd_lib.SINGLE_BRD	3C4 18B1
LCD_PWR_EN	LCD_PWR_EN - @single_brd_lib.SINGLE_BRD	13B2 13B4 13C6 18C1 19A6 19C4
LCD_PWR_EN_CONN	LCD_PWR_EN_CONN - @single_brd_lib.SINGLE_BRD	18C4
LCD_RESET_L	LCD_RESET_L - @single_brd_lib.SINGLE_BRD	3B7 18B1 19B6
LCD_RESET_L_CONN	LCD_RESET_L_CONN - @single_brd_lib.SINGLE_BRD	18C4
LCM_SWITCH	LCM_SWITCH - @single_brd_lib.SINGLE_BRD	13B4
LCM_VBOOST	LCM_VBOOST - @single_brd_lib.SINGLE_BRD	13B4
LED_BOOST_OUT	LED_BOOST_OUT - @single_brd_lib.SINGLE_BRD	19D5
LED_DRIVE_GSMB	LED_DRIVE_GSMB - @single_brd_lib.SINGLE_BRD	19C6 21C4
	TX_GTR_THRESH - @single_brd_lib.RADIO_MLB(i594_page 19)	26D8 30C2
LED_DRIVE_OUT	LED_DRIVE_OUT - @single_brd_lib.SINGLE_BRD	19C5 20C3
LED_DRV_LX	LED_DRV_LX - @single_brd_lib.SINGLE_BRD	19D6
LINEINA	LINEINA - @single_brd_lib.SINGLE_BRD	10C5
LINEINB	LINEINB - @single_brd_lib.SINGLE_BRD	10C5
MBUS_REF	MBUS_REF - @single_brd_lib.SINGLE_BRD	10C3 16B2
MENU_KEY_BUFF_L	MENU_KEY_BUFF_L - @single_brd_lib.SINGLE_BRD	3A3 3B7 13C4 13C6
MENU_KEY_CONN_L	MENU_KEY_CONN_L - @single_brd_lib.SINGLE_BRD	16C5
MENU_KEY_L	MENU_KEY_L - @single_brd_lib.SINGLE_BRD	3A4 16B8
MIKEY_INT_L	MIKEY_INT_L - @single_brd_lib.SINGLE_BRD	9B2 13B6
MIKEY_TEST_NEG	MIKEY_TEST_NEG - @single_brd_lib.SINGLE_BRD	13C6 15B7
MIKEY_TEST_POS	MIKEY_TEST_POS - @single_brd_lib.SINGLE_BRD	13C6 15C7
MIPI0D_VREG	MIPI0D_VREG - @single_brd_lib.SINGLE_BRD	7D3
MIPI1D_VREG	MIPI1D_VREG - @single_brd_lib.SINGLE_BRD	7D3
NAND_RDYBSY_L	NAND_RDYBSY_L - @single_brd_lib.SINGLE_BRD	6C2
NAND_TCKC	NAND_TCKC - @single_brd_lib.SINGLE_BRD	6B4
NAND_TMSC	NAND_TMSC - @single_brd_lib.SINGLE_BRD	6B4
NAND_VDDI	NAND_VDDI - @single_brd_lib.SINGLE_BRD	6D4
NEG_BOOST_OUT	NEG_BOOST_OUT - @single_brd_lib.SINGLE_BRD	19D3

2

思源电子 sydzi.taobao.com 为您提供维修手机.笔记本.电脑图纸

NEG_SWITCH	NEG_SWITCH - @single_brd_lib.SINGLE_BRD	19D3
NTC_CAM_N	NTC_CAM_N - @single_brd_lib.SINGLE_BRD	12A6
NTC_CAM_P	NTC_CAM_P - @single_brd_lib.SINGLE_BRD	12A6 12B7
NTC_FOREHEAD_N	NTC_FOREHEAD_N - @single_brd_lib.SINGLE_BRD	12A8
NTC_FOREHEAD_P	NTC_FOREHEAD_P - @single_brd_lib.SINGLE_BRD	12A7 12B7
NTC_H5P_N	NTC_H5P_N - @single_brd_lib.SINGLE_BRD	12A5
NTC_H5P_P	NTC_H5P_P - @single_brd_lib.SINGLE_BRD	12A5 12B7
NTC_PA_N	NTC_PA_N - @single_brd_lib.SINGLE_BRD	12A4
NTC_PA_P	NTC_PA_P - @single_brd_lib.SINGLE_BRD	12A4 12B7
OSC32I	OSC32I - @single_brd_lib.SINGLE_BRD	12B6
OSC32O	OSC32O - @single_brd_lib.SINGLE_BRD	12A6
OVP_GATE	OVP_GATE - @single_brd_lib.SINGLE_BRD	16B7
OVP_SW_EN_L	OVP_SW_EN_L - @single_brd_lib.SINGLE_BRD	15B4 16B8
PBL_RUN_BB_HSIC1_RDY	PBL_RUN_BB_HSIC1_RDY - @single_brd_lib.SINGLE_BRD	3A7 21D4
	PBL_RUN_BB_HSIC1_RDY - @single_brd_lib.RADIO_MLB(i594_page19)	26B6 26C1 26D8 30B2
PMU_ADC_IN7	PMU_ADC_IN7 - @single_brd_lib.SINGLE_BRD	13C3 13C6
PMU_AMUX_AY	PMU_AMUX_AY - @single_brd_lib.SINGLE_BRD	13C6 13D5 22C8
PMU_AMUX_AY_CTRL	PMU_AMUX_AY_CTRL - @single_brd_lib.SINGLE_BRD	3C5 13D7
PMU_AMUX_AY_R	PMU_AMUX_AY_R - @single_brd_lib.SINGLE_BRD	13D6
PMU_AMUX_BY	PMU_AMUX_BY - @single_brd_lib.SINGLE_BRD	13B6 13D5 22C8
PMU_AMUX_BY_CTRL	PMU_AMUX_BY_CTRL - @single_brd_lib.SINGLE_BRD	3B5 13D7
PMU_AMUX_BY_R	PMU_AMUX_BY_R - @single_brd_lib.SINGLE_BRD	13D6
PMU_DWI_CLK	PMU_DWI_CLK - @single_brd_lib.SINGLE_BRD	13B6
PMU_DWI_DI	PMU_DWI_DI - @single_brd_lib.SINGLE_BRD	13B6
PMU_DWI_DO	PMU_DWI_DO - @single_brd_lib.SINGLE_BRD	13B6
PMU_IRQ_L	PMU_IRQ_L - @single_brd_lib.SINGLE_BRD	3B7 13B6
PMU_RESET_IN	PMU_RESET_IN - @single_brd_lib.SINGLE_BRD	13B6
PN5V7_LCM_AVDDN_CONN	PN5V7_LCM_AVDDN_CONN - @single_brd_lib.SINGLE_BRD	18C4
PN5V7_SAGE_AVDDN	PN5V7_SAGE_AVDDN - @single_brd_lib.SINGLE_BRD	17A5 17D4 18D1 19B8 19D1
PP1V0	PP1V0 - @single_brd_lib.SINGLE_BRD	2C7 2D3 7B4 7D5 12A4
PP1V0_SRAM	PP1V0_SRAM - @single_brd_lib.SINGLE_BRD	5C7 12A4
PP1V1_CPU0	PP1V1_CPU0 - @single_brd_lib.SINGLE_BRD	5D8 12D5
PP1V1_CPU0_FET	PP1V1_CPU0_FET - @single_brd_lib.SINGLE_BRD	12D4
PP1V1_CPU1	PP1V1_CPU1 - @single_brd_lib.SINGLE_BRD	5C8 12D3
PP1V1_CPU1_FET	PP1V1_CPU1_FET - @single_brd_lib.SINGLE_BRD	12D2
PP1V1_CPUB	PP1V1_CPUB - @single_brd_lib.SINGLE_BRD	5D8 12D1
PP1V1_SOC	PP1V1_SOC - @single_brd_lib.SINGLE_BRD	5D4 12C2
PP1V2	PP1V2 - @single_brd_lib.SINGLE_BRD	2C6 4A6 4C7 4D3 12B5
PP1V2_CAM0_CONN	PP1V2_CAM0_CONN - @single_brd_lib.SINGLE_BRD	20B5
PP1V2_SDRAM	PP1V2_SDRAM - @single_brd_lib.SINGLE_BRD	4A8 4D7 4D8 12B7 12C1
PP1V7_VA_DAC	PP1V7_VA_DAC - @single_brd_lib.SINGLE_BRD	12B4 14D4
PP1V8	PP1V8 - @single_brd_lib.SINGLE_BRD	2B7 2C3 2D7 3C7 3C7 3D2 3D2 4B3 5A7 5B5 6B6 6B7 6C8 6D1 7B2 7D1 7D2 10D6 10D6 11C2 12B1 12B5 13A4 13D6 14B3 14B5 17D2 18B1 18C1 20B7 20C7
PP1V8_ALWAYS	PP1V8_ALWAYS - @single_brd_lib.SINGLE_BRD	3A4 12A5
PP1V8_CAM0_CONN	PP1V8_CAM0_CONN - @single_brd_lib.SINGLE_BRD	20C5
PP1V8_CAM0_REG	PP1V8_CAM0_REG - @single_brd_lib.SINGLE_BRD	20B7
PP1V8_CAM1_CONN	PP1V8_CAM1_CONN - @single_brd_lib.SINGLE_BRD	11C4
PP1V8_COMP	PP1V8_COMP - @single_brd_lib.SINGLE_BRD	14A7 14A8 14B6 14B7
PP1V8_CUMULUS_VDDLDO	PP1V8_CUMULUS_VDDLDO - @single_brd_lib.SINGLE_BRD	17B7 17D6
PP1V8_GRAPE	PP1V8_GRAPE - @single_brd_lib.SINGLE_BRD	12B5 17B1 17B5 17D5
PP1V8_LCM_CONN	PP1V8_LCM_CONN - @single_brd_lib.SINGLE_BRD	18C4
PP1V8_PLL	PP1V8_PLL - @single_brd_lib.SINGLE_BRD	2D6
PP1V8_SDRAM	PP1V8_SDRAM - @single_brd_lib.SINGLE_BRD	3C8 4C7 9B3 12B2 12C1 12C7 13A7 15C5 21C4
	PP_WL_BT_VDDIO_AP - @single_brd_lib.RADIO_MLB(i594_page19)	26C8 42A7 42C4
PP1V8_VA_CODEC	PP1V8_VA_CODEC - @single_brd_lib.SINGLE_BRD	10D5
PP1V8_XTAL	PP1V8_XTAL - @single_brd_lib.SINGLE_BRD	4B3
PP2V5_CAM0_AF	PP2V5_CAM0_AF - @single_brd_lib.SINGLE_BRD	12B3 20A7
PP2V5_CAM0_AF_COMP	PP2V5_CAM0_AF_COMP - @single_brd_lib.SINGLE_BRD	12B3 20B7
PP2V5_CAM0_AF_CONN	PP2V5_CAM0_AF_CONN - @single_brd_lib.SINGLE_BRD	20B5
PP2V5_CAM0_AF_GROUND	PP2V5_CAM0_AF_GROUND - @single_brd_lib.SINGLE_BRD	12A3 20B5
PP2V8_CAM0_CONN	PP2V8_CAM0_CONN - @single_brd_lib.SINGLE_BRD	20C5
PP2V8_CAM1_CONN	PP2V8_CAM1_CONN - @single_brd_lib.SINGLE_BRD	11C4
PP2V8_CAM_AVDD	PP2V8_CAM_AVDD - @single_brd_lib.SINGLE_BRD	11C2 12B5 20B7
PP3V0_ACC	PP3V0_ACC - @single_brd_lib.SINGLE_BRD	12B4 15C4
PP3V0_ALS	PP3V0_ALS - @single_brd_lib.SINGLE_BRD	11C5
PP3V0_COMP	PP3V0_COMP - @single_brd_lib.SINGLE_BRD	14A6 14A8 14B8
PP3V0_IMU	PP3V0_IMU - @single_brd_lib.SINGLE_BRD	12B5 14A5 14B1
PP3V0_IO	PP3V0_IO - @single_brd_lib.SINGLE_BRD	2D3 5B7 12B5
PP3V0_NAND	PP3V0_NAND - @single_brd_lib.SINGLE_BRD	6D1 12B5
PP3V0_NAND_XW	PP3V0_NAND_XW - @single_brd_lib.SINGLE_BRD	6D3
PP3V0_PROX	PP3V0_PROX - @single_brd_lib.SINGLE_BRD	11C5
PP3V0_PROX_ALS	PP3V0_PROX_ALS - @single_brd_lib.SINGLE_BRD	11B8 11C8 12B5
PP3V0_PROX_IR	PP3V0_PROX_IR - @single_brd_lib.SINGLE_BRD	11C2 12B5
PP3V0_USBMUX	PP3V0_USBMUX - @single_brd_lib.SINGLE_BRD	12B5 15C7
PP3V2_CODEC	PP3V2_CODEC - @single_brd_lib.SINGLE_BRD	10D3
PP3V3_VIB	PP3V3_VIB - @single_brd_lib.SINGLE_BRD	8C6
PP5V0_TRISTAR	PP5V0_TRISTAR - @single_brd_lib.SINGLE_BRD	15C4
PP5V0_USB_CONN	PP5V0_USB_CONN - @single_brd_lib.SINGLE_BRD	16C5 22D8
PP5V0_USB_PROTECT	PP5V0_USB_PROTECT - @single_brd_lib.SINGLE_BRD	12C8 16B8
PP5V0_USB_RPROT	PP5V0_USB_RPROT - @single_brd_lib.SINGLE_BRD	15C2 16B8
PP5V1_GRAPE_VDDH	PP5V1_GRAPE_VDDH - @single_brd_lib.SINGLE_BRD	13B3 17D7
PP5V7_LCD_AVDDH	PP5V7_LCD_AVDDH - @single_brd_lib.SINGLE_BRD	13B3 18C1 19B2
PP5V7_LCD_AVDDH_CONN	PP5V7_LCD_AVDDH_CONN - @single_brd_lib.SINGLE_BRD	18C4
PP5V7_SAGE_AVDDH	PP5V7_SAGE_AVDDH - @single_brd_lib.SINGLE_BRD	13B1 17B5 17D4
PPN_ZQ	PPN_ZQ - @single_brd_lib.SINGLE_BRD	6B3
PP_BATT_VCC	PP_BATT_VCC - @single_brd_lib.SINGLE_BRD	8C7 12D8 14D7 19D7 21C5 21C7 21D4 22D8
	PP_BATT_VCC_CONN - @single_brd_lib.RADIO_MLB(i594_page19)	26D1 26D8 27B8 28C8 34C5 35C5 36C5 36D8 38C5 39C5 42D7
PP_L19_VBOOST	PP_L19_VBOOST - @single_brd_lib.SINGLE_BRD	14D5
PP_LDO14_2P65	PP_LDO14_2P65 - @single_brd_lib.SINGLE_BRD	16C2 21A4
	PP_LDO14_2P65 - @single_brd_lib.RADIO_MLB(i594_page19)	26B8 27A2 32C6 37C3 40D6 41D5
PP_VCC_MAIN	PP_VCC_MAIN - @single_brd_lib.SINGLE_BRD	10D1 12C8 12D8 13B4 13C2 13C3 19D4
PROX_FILT	PROX_FILT - @single_brd_lib.SINGLE_BRD	17C8
PROX_RX_EN_1V8	PROX_RX_EN_1V8 - @single_brd_lib.SINGLE_BRD	11C8 17B5
PROX_RX_EN_CONN	PROX_RX_EN_CONN - @single_brd_lib.SINGLE_BRD	11C5
PROX_TX_EN_1V8_L	PROX_TX_EN_1V8_L - @single_brd_lib.SINGLE_BRD	17B1 17B7
PROX_TX_EN_BUFF	PROX_TX_EN_BUFF - @single_brd_lib.SINGLE_BRD	11B2 17B2
RADIO_ON_L	RADIO_ON_L - @single_brd_lib.SINGLE_BRD	3A7 21D4
	RADIO_ON_L - @single_brd_lib.RADIO_MLB(i594_page19)	26B6 26D3 26D8 28C8
RCVR_CONN_N	RCVR_CONN_N - @single_brd_lib.SINGLE_BRD	11C5
RCVR_CONN_P	RCVR_CONN_P - @single_brd_lib.SINGLE_BRD	11C5
RCVR_N	RCVR_N - @single_brd_lib.SINGLE_BRD	9C4 11A8
RCVR_P	RCVR_P - @single_brd_lib.SINGLE_BRD	9C4 11B8
RCVR_TEST	RCVR_TEST - @single_brd_lib.SINGLE_BRD	10C6 11A8
RESET_1V8_L	RESET_1V8_L - @single_brd_lib.SINGLE_BRD	2B7 12B2 13B6 15B4 18B1 21D4 22B8
	RF_RESET_L - @single_brd_lib.RADIO_MLB(i594_page19)	26C3 26D8
REVERSE_GATE	REVERSE_GATE - @single_brd_lib.SINGLE_BRD	16B6
RINGER_A	RINGER_A - @single_brd_lib.SINGLE_BRD	3B8 8B7 13B4 13C6
RINGER_A_CONN	RINGER_A_CONN - @single_brd_lib.SINGLE_BRD	8B5
SAGE_LX	SAGE_LX - @single_brd_lib.SINGLE_BRD	17B3
SAGE_LY	SAGE_LY - @single_brd_lib.SINGLE_BRD	17B3
SAGE_PANEL_IN<0>	SAGE_PANEL_IN<0> - @single_brd_lib.SINGLE_BRD	17C3 18A8
SAGE_PANEL_IN<1>	SAGE_PANEL_IN<1> - @single_brd_lib.SINGLE_BRD	17D3 18A8
SAGE_PANEL_IN<2>	SAGE_PANEL_IN<2> - @single_brd_lib.SINGLE_BRD	17D3 18A8
SAGE_PANEL_IN<3>	SAGE_PANEL_IN<3> - @single_brd_lib.SINGLE_BRD	17D3 18A8
SAGE_PANEL_IN<4>	SAGE_PANEL_IN<4> - @single_brd_lib.SINGLE_BRD	17D3 18A8
SAGE_PANEL_IN<5>	SAGE_PANEL_IN<5> - @single_brd_lib.SINGLE_BRD	17C3 18A8
SAGE_PANEL_IN<6>	SAGE_PANEL_IN<6> - @single_brd_lib.SINGLE_BRD	17D3 18A6
SAGE_PANEL_IN<7>	SAGE_PANEL_IN<7> - @single_brd_lib.SINGLE_BRD	17C3 18A6
SAGE_PANEL_IN<8>	SAGE_PANEL_IN<8> - @single_brd_lib.SINGLE_BRD	17C3 18A6
SAGE_PANEL_IN<9>	SAGE_PANEL_IN<9> - @single_brd_lib.SINGLE_BRD	17C3 18A6
SAGE_PANEL_IN<10>	SAGE_PANEL_IN<10> - @single_brd_lib.SINGLE_BRD	17D3 18A8
SAGE_PANEL_IN<11>	SAGE_PANEL_IN<11> - @single_brd_lib.SINGLE_BRD	17C3 18A8
SAGE_PANEL_IN<12>	SAGE_PANEL_IN<12> - @single_brd_lib.SINGLE_BRD	17C3 18A6
SAGE_PANEL_IN<13>	SAGE_PANEL_IN<13> - @single_brd_lib.SINGLE_BRD	17C3 18A6
SAGE_PANEL_IN<14>	SAGE_PANEL_IN<14> - @single_brd_lib.SINGLE_BRD	17C3 18A6
SAGE_PANEL_VSTM_OUT<0>	SAGE_PANEL_VSTM_OUT<0> - @single_brd_lib.SINGLE_BRD	17C1 18A6 18A8
SAGE_PANEL_VSTM_OUT<1>	SAGE_PANEL_VSTM_OUT<1> - @single_brd_lib.SINGLE_BRD	17B1 18A8
SAGE_PANEL_VSTM_OUT<2>	SAGE_PANEL_VSTM_OUT<2> - @single_brd_lib.SINGLE_BRD	17C1 18A8
SAGE_PANEL_VSTM_OUT<3>	SAGE_PANEL_VSTM_OUT<3> - @single_brd_lib.SINGLE_BRD	17C1 18A8
SAGE_PANEL_VSTM_OUT<4>	SAGE_PANEL_VSTM_OUT<4> - @single_brd_lib.SINGLE_BRD	17C1 18A8
SAGE_PANEL_VSTM_OUT<5>	SAGE_PANEL_VSTM_OUT<5> - @single_brd_lib.SINGLE_BRD	17C1 18A8
SAGE_PANEL_VSTM_OUT<6>	SAGE_PANEL_VSTM_OUT<6> - @single_brd_lib.SINGLE_BRD	17C1 18A8
SAGE_PANEL_VSTM_OUT<7>	SAGE_PANEL_VSTM_OUT<7> - @single_brd_lib.SINGLE_BRD	17C1 18A8
SAGE_PANEL_VSTM_OUT<8>	SAGE_PANEL_VSTM_OUT<8> - @single_brd_lib.SINGLE_BRD	17C1 18A8
SAGE_PANEL_VSTM_OUT<9>	SAGE_PANEL_VSTM_OUT<9> - @single_brd_lib.SINGLE_BRD	17C1 18A8
SAGE_PANEL_VSTM_OUT<10>	SAGE_PANEL_VSTM_OUT<10> - @single_brd_lib.SINGLE_BRD	17C1 18A8
SAGE_PANEL_VSTM_OUT<11>	SAGE_PANEL_VSTM_OUT<11> - @single_brd_lib.SINGLE_BRD	17B1 18A6
SAGE_PANEL_VSTM_OUT<12>	SAGE_PANEL_VSTM_OUT<12> - @single_brd_lib.SINGLE_BRD	17B1 18A6
SAGE_PANEL_VSTM_OUT<13>	SAGE_PANEL_VSTM_OUT<13> - @single_brd_lib.SINGLE_BRD	17C1 18A6
SAGE_PANEL_VSTM_OUT<14>	SAGE_PANEL_VSTM_OUT<14> - @single_brd_lib.SINGLE_BRD	17C1 18A6
SAGE_PANEL_VSTM_OUT<15>	SAGE_PANEL_VSTM_OUT<15> - @single_brd_lib.SINGLE_BRD	17C1 18A6
SAGE_PANEL_VSTM_OUT<16>	SAGE_PANEL_VSTM_OUT<16> - @single_brd_lib.SINGLE_BRD	17C1 18A6
SAGE_PANEL_VSTM_OUT<17>	SAGE_PANEL_VSTM_OUT<17> - @single_brd_lib.SINGLE_BRD	17C1 18A6
SAGE_PANEL_VSTM_OUT<18>	SAGE_PANEL_VSTM_OUT<18> - @single_brd_lib.SINGLE_BRD	17C1 18A6
SAGE_PANEL_VSTM_OUT<19>	SAGE_PANEL_VSTM_OUT<19> - @single_brd_lib.SINGLE_BRD	17C1 18A6
SAGE_VBIAS	SAGE_VBIAS - @single_brd_lib.SINGLE_BRD	17B3
SAGE_VBIAS_DRAIN	SAGE_VBIAS_DRAIN - @single_brd_lib.SINGLE_BRD	17C4 19B6
SAGE_VBST_OUTH	SAGE_VBST_OUTH - @single_brd_lib.SINGLE_BRD	17B3
SAGE_VBST_OUTL	SAGE_VBST_OUTL - @single_brd_lib.SINGLE_BRD	17B3
SAGE_VCM_IN	SAGE_VCM_IN - @single_brd_lib.SINGLE_BRD	17B2 18A5
SAGE_VCM_IN_CONN	SAGE_VCM_IN_CONN - @single_brd_lib.SINGLE_BRD	18A6 18A6
SAGE_VCPH	SAGE_VCPH - @single_brd_lib.SINGLE_BRD	17D2 18A5
SAGE_VCPH_CONN	SAGE_VCPH_CONN - @single_brd_lib.SINGLE_BRD	18A6 18A8
SAGE_VCPH_REF	SAGE_VCPH_REF - @single_brd_lib.SINGLE_BRD	17B4 18A5
SAGE_VCPH_REF_CONN	SAGE_VCPH_REF_CONN - @single_brd_lib.SINGLE_BRD	18A6 18A6
SAGE_VCPL	SAGE_VCPL - @single_brd_lib.SINGLE_BRD	17A7 17D1 18A5 18C6
SAGE_VCPL_CONN	SAGE_VCPL_CONN - @single_brd_lib.SINGLE_BRD	18A6 18A8
SAGE_VCPL_F	SAGE_VCPL_F - @single_brd_lib.SINGLE_BRD	17D2
SAGE_VCPL_LCM	SAGE_VCPL_LCM - @single_brd_lib.SINGLE_BRD	18C5
SAGE_VCPL_R	SAGE_VCPL_R - @single_brd_lib.SINGLE_BRD	17D2
SAGE_VCPL_REF	SAGE_VCPL_REF - @single_brd_lib.SINGLE_BRD	17B4 18A5
SAGE_VCPL_REF_CONN	SAGE_VCPL_REF_CONN - @single_brd_lib.SINGLE_BRD	18A6 18A6
SPI1_CS_L	SPI1_CS_L - @single_brd_lib.SINGLE_BRD	3C4 17B8
SPI1_MISO	SPI1_MISO - @single_brd_lib.SINGLE_BRD	3C4 17B8
SPI1_MISO_R	SPI1_MISO_R - @single_brd_lib.SINGLE_BRD	17B7
SPI1_MOSI	SPI1_MOSI - @single_brd_lib.SINGLE_BRD	3C4 17B7
SPI1_SCLK	SPI1_SCLK - @single_brd_lib.SINGLE_BRD	3C4 17B8
SPKAMP_INT_L	SPKAMP_INT_L - @single_brd_lib.SINGLE_BRD	3B7 14D6
SPKAMP_RESET_L	SPKAMP_RESET_L - @single_brd_lib.SINGLE_BRD	3A5 14D6
SPKR_CONN_N	SPKR_CONN_N - @single_brd_lib.SINGLE_BRD	14C1 16A6
SPKR_CONN_P	SPKR_CONN_P - @single_brd_lib.SINGLE_BRD	14C1 16A6
SPKR_FLR	SPKR_FLR - @single_brd_lib.SINGLE_BRD	14C3
SPKR_N	SPKR_N - @single_brd_lib.SINGLE_BRD	14C4
SPKR_P	SPKR_P - @single_brd_lib.SINGLE_BRD	14C4
SPKR_SES_N	SPKR_SES_N - @single_brd_lib.SINGLE_BRD	14D3
SPKR_SES_P	SPKR_SES_P - @single_brd_lib.SINGLE_BRD	14C3
SPKR_VQ	SPKR_VQ - @single_brd_lib.SINGLE_BRD	10B5
SPKR_VSENSE_N	SPKR_VSENSE_N - @single_brd_lib.SINGLE_BRD	14D1 16B5
SPKR_VSENSE_P	SPKR_VSENSE_P - @single_brd_lib.SINGLE_BRD	14D1 16B5
TCAL	TCAL - @single_brd_lib.SINGLE_BRD	12B7
TRISTAR_BYPASS	TRISTAR_BYPASS - @single_brd_lib.SINGLE_BRD	15B4
TRISTAR_INT	TRISTAR_INT - @single_brd_lib.SINGLE_BRD	3B5 13B6 15B4
TST_CLKOUT	TST_CLKOUT - @single_brd_lib.SINGLE_BRD	2B6 13B6
U10_BYPASS	U10_BYPASS - @single_brd_lib.SINGLE_BRD	13B2
U12_GPIO_3	U12_GPIO_3 - @single_brd_lib.SINGLE_BRD	17A7 17B5
UART1_CTS_L	UART1_CTS_L - @single_brd_lib.SINGLE_BRD	3B5 21C4
	BB_UART_RTS_L - @single_brd_lib.RADIO_MLB(i594_page19)	26C3 26C8 30C4
UART1_RTS_L	UART1_RTS_L - @single_brd_lib.SINGLE_BRD	3B5 21C4
	BB_UART_CTS_L - @single_brd_lib.RADIO_MLB(i594_page19)	26C3 26C8 30C4
UART1_RXD	UART1_RXD - @single_brd_lib.SINGLE_BRD	3B5 15B5 21C4
	BB_UART_TXD - @single_brd_lib.RADIO_MLB(i594_page19)	26C3 26C8 30C4
UART1_TXD	UART1_TXD - @single_brd_lib.SINGLE_BRD	3B5 15B5 21C4
	BB_UART_RXD - @single_brd_lib.RADIO_MLB(i594_page19)	26C3 26C8 30C4
UART2_RXD	UART2_RXD - @single_brd_lib.SINGLE_BRD	3B5 15B5
UART2_TXD	UART2_TXD - @single_brd_lib.SINGLE_BRD	3B5 15B5
UART3_CTS_L	UART3_CTS_L - @single_brd_lib.SINGLE_BRD	3B5 21B4
	BT_UART_RTS_L - @single_brd_lib.RADIO_MLB(i594_page19)	26B8 42B3
UART3_RTS_L	UART3_RTS_L - @single_brd_lib.SINGLE_BRD	3B5 21B4
	BT_UART_CTS_L - @single_brd_lib.RADIO_MLB(i594_page19)	26B8 42B3
UART3_RXD	UART3_RXD - @single_brd_lib.SINGLE_BRD	3B5 21B4
	BT_UART_TXD - @single_brd_lib.RADIO_MLB(i594_page19)	26B5 26B8 42C3
UART3_TXD	UART3_TXD - @single_brd_lib.SINGLE_BRD	3A5 21B4
	BT_UART_RXD - @single_brd_lib.RADIO_MLB(i594_page19)	26B5 26B8 42C3
UART4_RXD	UART4_RXD - @single_brd_lib.SINGLE_BRD	3A5 21B4
	WLAN_UART_TXD - @single_brd_lib.RADIO_MLB(i594_page19)	26C8 42A4 42B4
UART4_TXD	UART4_TXD - @single_brd_lib.SINGLE_BRD	3A5 21C4
	WLAN_UART_RXD - @single_brd_lib.RADIO_MLB(i594_page19)	26B8 42A4 42B4
UART6_RXD	UART6_RXD - @single_brd_lib.SINGLE_BRD	3A5 15B5
UART6_TXD	UART6_TXD - @single_brd_lib.SINGLE_BRD	3A5 15B5
USB_BRICKID	USB_BRICKID - @single_brd_lib.SINGLE_BRD	13C3 13C6 15B5
USB_CONN_SNUB	USB_CONN_SNUB - @single_brd_lib.SINGLE_BRD	16B5
USB_REXT	USB_REXT - @single_brd_lib.SINGLE_BRD	2B4
USB_VBUS_DETECT	USB_VBUS_DETECT - @single_brd_lib.SINGLE_BRD	2B4 12C8
VBST_OUTH_STACK	VBST_OUTH_STACK - @single_brd_lib.SINGLE_BRD	17B4
VBST_OUTL_STACK	VBST_OUTL_STACK - @single_brd_lib.SINGLE_BRD	17A4
VCENTER	VCENTER - @single_brd_lib.SINGLE_BRD	12C7
VCPL_SWITCH	VCPL_SWITCH - @single_brd_lib.SINGLE_BRD	17A7
VDD_REF	VDD_REF - @single_brd_lib.SINGLE_BRD	13C5
VDD_RTC	VDD_RTC - @single_brd_lib.SINGLE_BRD	13C5
VHP_FLYC	VHP_FLYC - @single_brd_lib.SINGLE_BRD	10C4
VHP_FLYN	VHP_FLYN - @single_brd_lib.SINGLE_BRD	10C4
VHP_FLYP	VHP_FLYP - @single_brd_lib.SINGLE_BRD	10C4
VIB	VIB - @single_brd_lib.SINGLE_BRD	8B5
VIB_LDO_EN	VIB_LDO_EN - @single_brd_lib.SINGLE_BRD	3B5 8C7
VIB_PWM	VIB_PWM - @single_brd_lib.SINGLE_BRD	3B5 8C7
VIB_PWM_G	VIB_PWM_G - @single_brd_lib.SINGLE_BRD	8C7
VIB_RETURN	VIB_RETURN - @single_brd_lib.SINGLE_BRD	8B5
VOL_DWN_L	VOL_DWN_L - @single_brd_lib.SINGLE_BRD	3B7 8B7 13C6
VOL_DWN_L_CONN	VOL_DWN_L_CONN - @single_brd_lib.SINGLE_BRD	8B5
VOL_UP_L	VOL_UP_L - @single_brd_lib.SINGLE_BRD	3B7 8B7 13C6
VOL_UP_L_CONN	VOL_UP_L_CONN - @single_brd_lib.SINGLE_BRD	8B5
VPUMP	VPUMP - @single_brd_lib.SINGLE_BRD	12D5
VREF	VREF - @single_brd_lib.SINGLE_BRD	13C5
VSW_CHG	VSW_CHG - @single_brd_lib.SINGLE_BRD	12C7
WDOG	WDOG - @single_brd_lib.SINGLE_BRD	2C4 13A7
WIFI_REG_ON	WIFI_REG_ON - @single_brd_lib.SINGLE_BRD	13B7 21C4
	WLAN_REG_ON - @single_brd_lib.RADIO_MLB(i594_page19)	26C1 26C8 42A4 42A8 42C7
WIFI_REG_ON_R	WIFI_REG_ON_R - @single_brd_lib.SINGLE_BRD	13B6
WLAN_HSIC3_RESUME	WLAN_HSIC3_RESUME - @single_brd_lib.SINGLE_BRD	3B7 21A4
	WLAN_HSIC3_RESUME - @single_brd_lib.RADIO_MLB(i594_page19)	26D8 42B5
WLED_LX	WLED_LX - @single_brd_lib.SINGLE_BRD	13B3
XTAL_24M_O_R	XTAL_24M_O_R - @single_brd_lib.SINGLE_BRD	2C3
XTAL_GND	XTAL_GND - @single_brd_lib.SINGLE_BRD	2B2

Base nets and synonyms for single_brd_lib.RADIO_MLB(@single_brd_lib.single_brd(sch_1):page19_i594@radio_mlb_lib.radio_mlb(sch_1))

思源电子 sydzi.taobao.com 为您提供维修手机.笔记本.电脑图纸

Base Signal	Synonyms	Location([Zone][dir])
2G_VBATT_IN	2G_VBATT_IN - @single_brd_lib.RADIO_MLB	36C4
50_3G_TX_B1_T	50_3G_TX_B1_T - @single_brd_lib.RADIO_MLB	38C8
50_3G_TX_B2_T	50_3G_TX_B2_T - @single_brd_lib.RADIO_MLB	39C8
50_3G_TX_B5_T	50_3G_TX_B5_T - @single_brd_lib.RADIO_MLB	34C8
50_3G_TX_B8_T	50_3G_TX_B8_T - @single_brd_lib.RADIO_MLB	34D7
50_3G_TX_B13_PA_T	50_3G_TX_B13_PA_T - @single_brd_lib.RADIO_MLB	35C6
50_3G_TX_B13_T	50_3G_TX_B13_T - @single_brd_lib.RADIO_MLB	35C8
50_ASM_ANT	50_ASM_ANT - @single_brd_lib.RADIO_MLB	37B2
50_ASM_ANT_MCH	50_ASM_ANT_MCH - @single_brd_lib.RADIO_MLB	37B2
50_B2_DUPLX_RX	50_B2_DUPLX_RX - @single_brd_lib.RADIO_MLB	39C4
50_B2_RX_BAL	50_B2_RX_BAL - @single_brd_lib.RADIO_MLB	39C3
50_BAND1_TX_INT_OUT	50_BAND1_TX_INT_OUT - @single_brd_lib.RADIO_MLB	38C6
50_BAND1_TX_IN_IN	50_BAND1_TX_IN_IN - @single_brd_lib.RADIO_MLB	38C7
50_BAND1_TX_PA_IN	50_BAND1_TX_PA_IN - @single_brd_lib.RADIO_MLB	38C6
50_BAND2_TX_INT_IN	50_BAND2_TX_INT_IN - @single_brd_lib.RADIO_MLB	39C7
50_BAND4_TX_IN	50_BAND4_TX_IN - @single_brd_lib.RADIO_MLB	38B7
50_BAND4_TX_INT_OUT	50_BAND4_TX_INT_OUT - @single_brd_lib.RADIO_MLB	38B6
50_BAND4_TX_PA_IN	50_BAND4_TX_PA_IN - @single_brd_lib.RADIO_MLB	38B6
50_BAND5_TX_INT_IN	50_BAND5_TX_INT_IN - @single_brd_lib.RADIO_MLB	34C7
50_BAND5_TX_INT_OUT	50_BAND5_TX_INT_OUT - @single_brd_lib.RADIO_MLB	34C6
50_BAND5_TX_PA_IN	50_BAND5_TX_PA_IN - @single_brd_lib.RADIO_MLB	34C5
50_BAND8_TX_INT_OUT	50_BAND8_TX_INT_OUT - @single_brd_lib.RADIO_MLB	34D6
50_BAND8_TX_PA_IN	50_BAND8_TX_PA_IN - @single_brd_lib.RADIO_MLB	34D5
50_BAND13_DUPLX_ANT	50_BAND13_DUPLX_ANT - @single_brd_lib.RADIO_MLB	35C2
50_BAND13_DUPLX_TX	50_BAND13_DUPLX_TX - @single_brd_lib.RADIO_MLB	35C3
50_BAND13_PA_MATCH	50_BAND13_PA_MATCH - @single_brd_lib.RADIO_MLB	35C4
50_BAND13_PA_OUT	50_BAND13_PA_OUT - @single_brd_lib.RADIO_MLB	35C4
50_BAND13_TRX	50_BAND13_TRX - @single_brd_lib.RADIO_MLB	35C1 37B6
50_BAND13_TRX_MATCH	50_BAND13_TRX_MATCH - @single_brd_lib.RADIO_MLB	35C2
50_BAND13_TX_INT_IN	50_BAND13_TX_INT_IN - @single_brd_lib.RADIO_MLB	35C7
50_BAND13_TX_INT_OUT	50_BAND13_TX_INT_OUT - @single_brd_lib.RADIO_MLB	35C6
50_BAND13_TX_PA_IN	50_BAND13_TX_PA_IN - @single_brd_lib.RADIO_MLB	35C5
50_CM_TRAP_B5	50_CM_TRAP_B5 - @single_brd_lib.RADIO_MLB	32C3
50_CPL_B1_B4_OUT	50_CPL_B1_B4_OUT - @single_brd_lib.RADIO_MLB	34C3 38C3
50_CPL_B1_B4_TERM	50_CPL_B1_B4_TERM - @single_brd_lib.RADIO_MLB	38C4
50_CPL_B5_B8_OUT	50_CPL_B5_B8_OUT - @single_brd_lib.RADIO_MLB	34C3 35B5
50_CPL_B13_OUT	50_CPL_B13_OUT - @single_brd_lib.RADIO_MLB	35B5 39B5
50_CPL_PDET	50_CPL_PDET - @single_brd_lib.RADIO_MLB	31D8 39C3
50_DIVERSITY_SWITCH_MATCH	50_DIVERSITY_SWITCH_MATCH - @single_brd_lib.RADIO_MLB	40C6
50_DRX_ANT	50_DRX_ANT - @single_brd_lib.RADIO_MLB	37A2 40C7
50_DRX_ASM_MCH	50_DRX_ASM_MCH - @single_brd_lib.RADIO_MLB	40C6
50_DRX_B3_MATCH	50_DRX_B3_MATCH - @single_brd_lib.RADIO_MLB	37B6
50_DRX_B3_OUT	50_DRX_B3_OUT - @single_brd_lib.RADIO_MLB	37B6 40C2
50_GPS_FILT_CONN	50_GPS_FILT_CONN - @single_brd_lib.RADIO_MLB	41C6
50_GPS_FILT_IN	50_GPS_FILT_IN - @single_brd_lib.RADIO_MLB	41C5
50_GPS_LNA_OUT	50_GPS_LNA_OUT - @single_brd_lib.RADIO_MLB	41C8
50_HSIC_BB_DATA	50_HSIC1_DATA - @single_brd_lib.SINGLE_BRD 50_HSIC_BB_DATA - @single_brd_lib.RADIO_MLB	2C6 21B4 26B3 26D8 29B3
50_HSIC_BB_STROBE	50_HSIC1_STB - @single_brd_lib.SINGLE_BRD 50_HSIC_BB_STROBE - @single_brd_lib.RADIO_MLB	2C6 21B4 26B3 26C8 29B3
50_HSIC_CAL	50_HSIC_CAL - @single_brd_lib.RADIO_MLB	29B3
50_HSIC_WLAN_DATA	50_HSIC3_DATA - @single_brd_lib.SINGLE_BRD 50_HSIC_WLAN_DATA - @single_brd_lib.RADIO_MLB	2B6 21B4 26B8 42B7
50_HSIC_WLAN_STROBE	50_HSIC3_STB - @single_brd_lib.SINGLE_BRD 50_HSIC_WLAN_STROBE - @single_brd_lib.RADIO_MLB	2B6 21B4 26B8 42B7
50_LOW_ANT_FEED	50_LOW_ANT_FEED - @single_brd_lib.RADIO_MLB	41A7
50_LOW_ANT_MCH	50_LOW_ANT_MCH - @single_brd_lib.RADIO_MLB	41A7
50_NTCH_FILT_OUT	50_NTCH_FILT_OUT - @single_brd_lib.RADIO_MLB	41D7
50_OHM_TERM	50_OHM_TERM - @single_brd_lib.RADIO_MLB	40C4
50_OHM_TERM_2	50_OHM_TERM_2 - @single_brd_lib.RADIO_MLB	37B3
50_PDET_IN	50_PDET_IN - @single_brd_lib.RADIO_MLB	31C7
50_PDET_PAD	50_PDET_PAD - @single_brd_lib.RADIO_MLB	31D7
50_PRI_ANT	50_PRI_ANT - @single_brd_lib.RADIO_MLB	37B1 41A5
50_RX_DCS	50_RX_DCS - @single_brd_lib.RADIO_MLB	37C4
50_RX_DCS_FIL	50_RX_DCS_FIL - @single_brd_lib.RADIO_MLB	37C5
50_TXRX_B1_ASM	50_TXRX_B1_ASM - @single_brd_lib.RADIO_MLB	37C4 38B3
50_TXRX_B1_PAD_ANT	50_TXRX_B1_PAD_ANT - @single_brd_lib.RADIO_MLB	38B5
50_TXRX_B1_PAD_MCH	50_TXRX_B1_PAD_MCH - @single_brd_lib.RADIO_MLB	38B5
50_TXRX_B2_ASM	50_TXRX_B2_ASM - @single_brd_lib.RADIO_MLB	37B4 39C1
50_TXRX_B2_PAD_ANT	50_TXRX_B2_PAD_ANT - @single_brd_lib.RADIO_MLB	39C4
50_TXRX_B2_PAD_MCH	50_TXRX_B2_PAD_MCH - @single_brd_lib.RADIO_MLB	39C3
50_TXRX_B4_ASM	50_TXRX_B4_ASM - @single_brd_lib.RADIO_MLB	37C4 38B4
50_TXRX_B4_PAD_ANT	50_TXRX_B4_PAD_ANT - @single_brd_lib.RADIO_MLB	38B5
50_TXRX_B4_PAD_MCH	50_TXRX_B4_PAD_MCH - @single_brd_lib.RADIO_MLB	38B5
50_TXRX_B5_ASM	50_TXRX_B5_ASM - @single_brd_lib.RADIO_MLB	34B7 37C4
50_TXRX_B5_PAD_ANT	50_TXRX_B5_PAD_ANT - @single_brd_lib.RADIO_MLB	34B5
50_TXRX_B5_PAD_MCH	50_TXRX_B5_PAD_MCH - @single_brd_lib.RADIO_MLB	34B6
50_TXRX_B8_ASM	50_TXRX_B8_ASM - @single_brd_lib.RADIO_MLB	34B1 37C4
50_TXRX_B8_PAD_ANT	50_TXRX_B8_PAD_ANT - @single_brd_lib.RADIO_MLB	34B3
50_TXRX_B8_PAD_MCH	50_TXRX_B8_PAD_MCH - @single_brd_lib.RADIO_MLB	34B2
50_TXRX_B13_ASM	50_TXRX_B13_ASM - @single_brd_lib.RADIO_MLB	37B4
50_TX_3G_B8_FILT	50_TX_3G_B8_FILT - @single_brd_lib.RADIO_MLB	34D7
50_TX_B2	50_TX_B2 - @single_brd_lib.RADIO_MLB	39C6
50_TX_B4_MCH	50_TX_B4_MCH - @single_brd_lib.RADIO_MLB	38B8
50_TX_G_HB_ASM	50_TX_G_HB_ASM - @single_brd_lib.RADIO_MLB	36B2 37B4
50_TX_G_HB_MCH	50_TX_G_HB_MCH - @single_brd_lib.RADIO_MLB	36C7
50_TX_G_HB_PAIN	50_TX_G_HB_PAIN - @single_brd_lib.RADIO_MLB	36C6
50_TX_G_HB_PAMCH	50_TX_G_HB_PAMCH - @single_brd_lib.RADIO_MLB	36B3
50_TX_G_HB_PAOUT	50_TX_G_HB_PAOUT - @single_brd_lib.RADIO_MLB	36B4
50_TX_G_LB_ASM	50_TX_G_LB_ASM - @single_brd_lib.RADIO_MLB	36B2 37B4
50_TX_G_LB_MCH	50_TX_G_LB_MCH - @single_brd_lib.RADIO_MLB	36B7
50_TX_G_LB_PAIN	50_TX_G_LB_PAIN - @single_brd_lib.RADIO_MLB	36B6
50_TX_G_LB_PAMCH	50_TX_G_LB_PAMCH - @single_brd_lib.RADIO_MLB	36B3
50_TX_G_LB_PAOUT	50_TX_G_LB_PAOUT - @single_brd_lib.RADIO_MLB	36B4
50_TX_PCS_1	50_TX_PCS_1 - @single_brd_lib.RADIO_MLB	39C5
50_TX_PCS_2	50_TX_PCS_2 - @single_brd_lib.RADIO_MLB	39C5
50_UPPER_ANT_FEED	50_UPPER_ANT_FEED - @single_brd_lib.RADIO_MLB	41D8
50_UPPER_MCH_0	50_UPPER_MCH_0 - @single_brd_lib.RADIO_MLB	41D7
50_UPPER_MCH_1	50_UPPER_MCH_1 - @single_brd_lib.RADIO_MLB	41D6
50_UPPER_MCH_2	50_UPPER_MCH_2 - @single_brd_lib.RADIO_MLB	41D4
50_UP_ANT_TEST	50_UP_ANT_TEST - @single_brd_lib.RADIO_MLB	37A2 41C1
50_UP_ANT_TEST_COAX	50_UP_ANT_TEST_COAX - @single_brd_lib.RADIO_MLB	41C3
50_WIFI_ANT_FD	50_WIFI_ANT_FD - @single_brd_lib.RADIO_MLB	42D5
50_WIFI_ANT_FD_1	50_WIFI_ANT_FD_1 - @single_brd_lib.RADIO_MLB	42D5
50_WIFI_ANT_FD_2	50_WIFI_ANT_FD_2 - @single_brd_lib.RADIO_MLB	42D4
50_WLAN_A	50_WLAN_A - @single_brd_lib.RADIO_MLB	42C4
50_WLAN_A_DIPLX	50_WLAN_A_DIPLX - @single_brd_lib.RADIO_MLB	42C2
50_WLAN_G	50_WLAN_G - @single_brd_lib.RADIO_MLB	42C4
50_WLAN_G_1	50_WLAN_G_1 - @single_brd_lib.RADIO_MLB	42C2
50_XCVR_2G_PA_HB_TX	50_XCVR_2G_PA_HB_TX - @single_brd_lib.RADIO_MLB	31C7 36C8
50_XCVR_2G_PA_LB_TX	50_XCVR_2G_PA_LB_TX - @single_brd_lib.RADIO_MLB	31C7 36B8
50_XCVR_3G_B1_TX	50_XCVR_3G_B1_TX - @single_brd_lib.RADIO_MLB	31C7 38C8
50_XCVR_3G_B2_TX	50_XCVR_3G_B2_TX - @single_brd_lib.RADIO_MLB	31C7 39C8
50_XCVR_3G_B4_TX	50_XCVR_3G_B4_TX - @single_brd_lib.RADIO_MLB	31C7 38B8
50_XCVR_3G_B5_TX	50_XCVR_3G_B5_TX - @single_brd_lib.RADIO_MLB	31C7 34C8
50_XCVR_3G_B8_TX	50_XCVR_3G_B8_TX - @single_brd_lib.RADIO_MLB	31C7 34D8
50_XCVR_3G_B13_TX	50_XCVR_3G_B13_TX - @single_brd_lib.RADIO_MLB	31C7 35C8
90_BB_USB_D_N	90_BB_USB_N - @single_brd_lib.SINGLE_BRD 90_BB_USB_D_N - @single_brd_lib.RADIO_MLB	15B5 21C4 26C3 26C8 29A5
90_BB_USB_D_P	90_BB_USB_P - @single_brd_lib.SINGLE_BRD 90_BB_USB_D_P - @single_brd_lib.RADIO_MLB	15C5 21C4 26C3 26C8 29A5
100_B4_DUPLX_N	100_B4_DUPLX_N - @single_brd_lib.RADIO_MLB	38B3
100_B4_DUPLX_P	100_B4_DUPLX_P - @single_brd_lib.RADIO_MLB	38B3
100_B5_B8_RX_MTCH_N	100_B5_B8_RX_MTCH_N - @single_brd_lib.RADIO_MLB	32C4
100_B5_B8_RX_MTCH_P	100_B5_B8_RX_MTCH_P - @single_brd_lib.RADIO_MLB	32B4
100_BAND1_DUPLX_MATCH_RX_N	100_BAND1_DUPLX_MATCH_RX_N - @single_brd_lib.RADIO_MLB	38C2
100_BAND1_DUPLX_MATCH_RX_P	100_BAND1_DUPLX_MATCH_RX_P - @single_brd_lib.RADIO_MLB	38C2
100_BAND1_DUPLX_RX_N	100_BAND1_DUPLX_RX_N - @single_brd_lib.RADIO_MLB	38C3
100_BAND1_DUPLX_RX_P	100_BAND1_DUPLX_RX_P - @single_brd_lib.RADIO_MLB	38C3
100_BAND1_RX_N	100_BAND1_RX_N - @single_brd_lib.RADIO_MLB	31B7 38C1
100_BAND1_RX_P	100_BAND1_RX_P - @single_brd_lib.RADIO_MLB	31B7 38C1
100_BAND2_RX_N	100_BAND2_RX_N - @single_brd_lib.RADIO_MLB	31B7 39B1
100_BAND2_RX_P	100_BAND2_RX_P - @single_brd_lib.RADIO_MLB	31B7 39C1
100_BAND4_DUPLX_MATCH1_RX_N	100_BAND4_DUPLX_MATCH1_RX_N - @single_brd_lib.RADIO_MLB	38B3
100_BAND4_DUPLX_MATCH_RX_N	100_BAND4_DUPLX_MATCH_RX_N - @single_brd_lib.RADIO_MLB	38B2
100_BAND4_DUPLX_MATCH_RX_P	100_BAND4_DUPLX_MATCH_RX_P - @single_brd_lib.RADIO_MLB	38B2
100_BAND4_DUPLX_RX_N	100_BAND4_DUPLX_RX_N - @single_brd_lib.RADIO_MLB	38B4
100_BAND4_RX_N	100_BAND4_RX_N - @single_brd_lib.RADIO_MLB	31C7 38B1
100_BAND4_RX_P	100_BAND4_RX_P - @single_brd_lib.RADIO_MLB	31C7 38B1
100_BAND5_BAND8_RX_N	100_BAND5_BAND8_RX_N - @single_brd_lib.RADIO_MLB	31C7 32C3
100_BAND5_BAND8_RX_P	100_BAND5_BAND8_RX_P - @single_brd_lib.RADIO_MLB	31C7 32B3
100_BAND5_DUPLX_RX_N	100_BAND5_DUPLX_RX_N - @single_brd_lib.RADIO_MLB	34A5
100_BAND5_DUPLX_RX_P	100_BAND5_DUPLX_RX_P - @single_brd_lib.RADIO_MLB	34A5
100_BAND5_RX_N	100_BAND5_RX_N - @single_brd_lib.RADIO_MLB	32B6 34A4
100_BAND5_RX_P	100_BAND5_RX_P - @single_brd_lib.RADIO_MLB	32C6 34A4
100_BAND8_DUPLX_RX_N	100_BAND8_DUPLX_RX_N - @single_brd_lib.RADIO_MLB	34B3
100_BAND8_DUPLX_RX_P	100_BAND8_DUPLX_RX_P - @single_brd_lib.RADIO_MLB	34B3
100_BAND8_RX_N	100_BAND8_RX_N - @single_brd_lib.RADIO_MLB	32B6 34B2
100_BAND8_RX_P	100_BAND8_RX_P - @single_brd_lib.RADIO_MLB	32C6 34B2
100_BAND13_DUPLX_MATCH_RX_N	100_BAND13_DUPLX_MATCH_RX_N - @single_brd_lib.RADIO_MLB	35C2
100_BAND13_DUPLX_MATCH_RX_P	100_BAND13_DUPLX_MATCH_RX_P - @single_brd_lib.RADIO_MLB	35D2
100_BAND13_DUPLX_RX_N	100_BAND13_DUPLX_RX_N - @single_brd_lib.RADIO_MLB	35C3
100_BAND13_DUPLX_RX_P	100_BAND13_DUPLX_RX_P - @single_brd_lib.RADIO_MLB	35D3
100_BAND13_RX_N	100_BAND13_RX_N - @single_brd_lib.RADIO_MLB	31C7 35C1
100_BAND13_RX_P	100_BAND13_RX_P - @single_brd_lib.RADIO_MLB	31C7 35D1
100_DCS1800_RX_MATCH_N	100_DCS1800_RX_MATCH_N - @single_brd_lib.RADIO_MLB	37C7
100_DCS1800_RX_MATCH_P	100_DCS1800_RX_MATCH_P - @single_brd_lib.RADIO_MLB	37B7
100_DRX_B5_B8_SW_MATCH_N	100_DRX_B5_B8_SW_MATCH_N - @single_brd_lib.RADIO_MLB	40B3
100_DRX_B5_B8_SW_MATCH_P	100_DRX_B5_B8_SW_MATCH_P - @single_brd_lib.RADIO_MLB	40B3
100_DRX_B5_B8_SW_N	100_DRX_B5_B8_SW_N - @single_brd_lib.RADIO_MLB	40B4 40C2
100_DRX_B5_B8_SW_P	100_DRX_B5_B8_SW_P - @single_brd_lib.RADIO_MLB	40B4 40D2
100_DRX_B13_B17_MATCH_N	100_DRX_B13_B17_MATCH_N - @single_brd_lib.RADIO_MLB	40A3
100_DRX_B13_B17_MATCH_P	100_DRX_B13_B17_MATCH_P - @single_brd_lib.RADIO_MLB	40B4
100_DRX_B13_B17_SW_N	100_DRX_B13_B17_SW_N - @single_brd_lib.RADIO_MLB	40A4 40D2
100_DRX_B13_B17_SW_P	100_DRX_B13_B17_SW_P - @single_brd_lib.RADIO_MLB	40B4 40D2
100_DRX_BAND1_BAND4_N	100_DRX_BAND1_BAND4_N - @single_brd_lib.RADIO_MLB	31B7 40B5
100_DRX_BAND1_BAND4_P	100_DRX_BAND1_BAND4_P - @single_brd_lib.RADIO_MLB	31B7 40B5
100_DRX_BAND1_BAND4_SAW_OUT_N	100_DRX_BAND1_BAND4_SAW_OUT_N - @single_brd_lib.RADIO_MLB	40B7 40C2
100_DRX_BAND1_BAND4_SAW_OUT_P	100_DRX_BAND1_BAND4_SAW_OUT_P - @single_brd_lib.RADIO_MLB	40B7 40C2
100_DRX_BAND2_RX_N	100_DRX_BAND2_RX_N - @single_brd_lib.RADIO_MLB	31B7 40A5
100_DRX_BAND2_RX_P	100_DRX_BAND2_RX_P - @single_brd_lib.RADIO_MLB	31B7 40B5
100_DRX_BAND2_SAW_OUT_N	100_DRX_BAND2_SAW_OUT_N - @single_brd_lib.RADIO_MLB	40A7 40C2
100_DRX_BAND2_SAW_OUT_P	100_DRX_BAND2_SAW_OUT_P - @single_brd_lib.RADIO_MLB	40B7 40C2
100_DRX_BAND5_BAND8_N	100_DRX_BAND5_BAND8_N - @single_brd_lib.RADIO_MLB	31B7 40B2
100_DRX_BAND5_BAND8_P	100_DRX_BAND5_BAND8_P - @single_brd_lib.RADIO_MLB	31B7 40B2
100_DRX_BAND13_BAND17_N	100_DRX_BAND13_BAND17_N - @single_brd_lib.RADIO_MLB	31B7 40A2
100_DRX_BAND13_BAND17_P	100_DRX_BAND13_BAND17_P - @single_brd_lib.RADIO_MLB	31B7 40B2
100_GPS_FILT_OUT_N	100_GPS_FILT_OUT_N - @single_brd_lib.RADIO_MLB	41B5
100_GPS_FILT_OUT_P	100_GPS_FILT_OUT_P - @single_brd_lib.RADIO_MLB	41C5
100_GPS_IN_N	100_GPS_IN_N - @single_brd_lib.RADIO_MLB	31C4 41B3
100_GPS_IN_P	100_GPS_IN_P - @single_brd_lib.RADIO_MLB	31C4 41C3
100_PRX_B5_B8_SW_N	100_PRX_B5_B8_SW_N - @single_brd_lib.RADIO_MLB	32C5
100_PRX_B5_B8_SW_P	100_PRX_B5_B8_SW_P - @single_brd_lib.RADIO_MLB	32B5
100_PRX_DCS_G_1_N	100_PRX_DCS_G_1_N - @single_brd_lib.RADIO_MLB	37C6
100_PRX_DCS_G_1_P	100_PRX_DCS_G_1_P - @single_brd_lib.RADIO_MLB	37C6
100_XCVR_DCS1800_RX_N	100_XCVR_DCS1800_RX_N - @single_brd_lib.RADIO_MLB	31B7 37C8
100_XCVR_DCS1800_RX_P	100_XCVR_DCS1800_RX_P - @single_brd_lib.RADIO_MLB	31B7 37B8
A0_PMCLK	A0_PMCLK - @single_brd_lib.RADIO_MLB	28B3
ADC_LDO6_RUIM_1V8	ADC_LDO6_RUIM_1V8 - @single_brd_lib.SINGLE_BRD ADC_LDO6_RUIM_1V8 - @single_brd_lib.RADIO_MLB	13B6 21C4 26D5
ADC_LVS1	ADC_LVS1 - @single_brd_lib.SINGLE_BRD ADC_LVS1 - @single_brd_lib.RADIO_MLB	13B6 21C4 26D5
ADC_SMPS1_MSMC_1V05	ADC_SMPS1_MSMC_1V05 - @single_brd_lib.SINGLE_BRD ADC_SMPS1_MSMC_1V05 - @single_brd_lib.RADIO_MLB	13C6 21C4 26D5
ADC_SMPS3_MSME_1V8	ADC_SMPS3_MSME_1V8 - @single_brd_lib.SINGLE_BRD ADC_SMPS3_MSME_1V8 - @single_brd_lib.RADIO_MLB	13C6 21C4 26D5
AGG_CHANNEL	AGG_CHANNEL - @single_brd_lib.RADIO_MLB	42A6 42B4
ANT_SEL_0	ANT_SEL_0 - @single_brd_lib.RADIO_MLB	30C2 37C1
ANT_SEL_1	ANT_SEL_1 - @single_brd_lib.RADIO_MLB	26C3 30C2 37C1
ANT_SEL_2	ANT_SEL_2 - @single_brd_lib.RADIO_MLB	26C1 30C2 37C1
ANT_SEL_3	ANT_SEL_3 - @single_brd_lib.RADIO_MLB	30C2 37C1
ANT_SEL_4	ANT_SEL_4 - @single_brd_lib.RADIO_MLB	30C2 37C1
AP_HSIC1_RDY	AP_HSIC1_RDY - @single_brd_lib.SINGLE_BRD AP_HSIC1_RDY - @single_brd_lib.RADIO_MLB	3B7 21A4 26B6 26C1 26D8 30B2
AP_HSIC3_RDY	AP_HSIC3_RDY - @single_brd_lib.SINGLE_BRD AP_HSIC3_RDY - @single_brd_lib.RADIO_MLB	3B5 21D1 26B8 42A4 42B3
AP_WAKE_MODEM	AP_WAKE_MODEM - @single_brd_lib.SINGLE_BRD AP_WAKE_MODEM - @single_brd_lib.RADIO_MLB	3A7 21B4 26D8 30B4
B1B4_SELECT	B1B4_SELECT - @single_brd_lib.RADIO_MLB	30B4 38D3
B2_RX_BAL_TERM	B2_RX_BAL_TERM - @single_brd_lib.RADIO_MLB	39B2
BB_ERROR_FLAG	BB_ERROR_FLAG - @single_brd_lib.RADIO_MLB	26C6 30C4
BB_HSIC1_REMOTE_WAKE	BB_HSIC1_REMOTE_WAKE - @single_brd_lib.SINGLE_BRD BB_HSIC1_REMOTE_WAKE - @single_brd_lib.RADIO_MLB	3B7 21C4 26C8 30B2
BB_I2S_CLK	45_I2S_BCLK - @single_brd_lib.SINGLE_BRD BB_I2S_CLK - @single_brd_lib.RADIO_MLB	3D4 21C4 26C8 30B4
BB_I2S_RXD	I2S1_DOUT - @single_brd_lib.SINGLE_BRD BB_I2S_RXD - @single_brd_lib.RADIO_MLB	3D4 21C4 26C8 30B4
BB_I2S_TXD	I2S1_DIN - @single_brd_lib.SINGLE_BRD BB_I2S_TXD - @single_brd_lib.RADIO_MLB	3D4 21C4 26C8 30B4
BB_I2S_WS	I2S1_LRCLK - @single_brd_lib.SINGLE_BRD BB_I2S_WS - @single_brd_lib.RADIO_MLB	3D4 21C4 26C8 30B4
BB_JTAG_RTCLK	BB_JTAG_RTCLK - @single_brd_lib.RADIO_MLB	26C3 29B3
BB_JTAG_TCK	BB_JTAG_TCK - @single_brd_lib.SINGLE_BRD BB_JTAG_TCK - @single_brd_lib.RADIO_MLB	3B7 21D1 26B8 26C3 29B5
BB_JTAG_TDI	BB_JTAG_TDI - @single_brd_lib.SINGLE_BRD BB_JTAG_TDI - @single_brd_lib.RADIO_MLB	3B7 21D1 26B8 26C3 29B5
BB_JTAG_TDO	BB_JTAG_TDO - @single_brd_lib.SINGLE_BRD BB_JTAG_TDO - @single_brd_lib.RADIO_MLB	3B7 21D1 26A8 26C3 29B3
BB_JTAG_TMS	BB_JTAG_TMS - @single_brd_lib.SINGLE_BRD BB_JTAG_TMS - @single_brd_lib.RADIO_MLB	3B7 21D1 26A8 26C3 29B5
BB_JTAG_TRST_L	BB_JTAG_TRST_L - @single_brd_lib.SINGLE_BRD BB_JTAG_TRST_L - @single_brd_lib.RADIO_MLB	3A5 21D1 26A8 26C3 29B5
BB_PDM	BB_PDM - @single_brd_lib.RADIO_MLB	30A4 30B2
BB_PDM_FILT	BB_PDM_FILT - @single_brd_lib.RADIO_MLB	30A3
BB_RST_L	BB_RST_L - @single_brd_lib.SINGLE_BRD BB_RST_L - @single_brd_lib.RADIO_MLB	3B7 21D4 26C1 26D8 28C8 29B5
BB_UART_CTS_L	UART1_RTS_L - @single_brd_lib.SINGLE_BRD BB_UART_CTS_L - @single_brd_lib.RADIO_MLB	3B5 21C4 26C3 26C8 30C4
BB_UART_RTS_L	UART1_CTS_L - @single_brd_lib.SINGLE_BRD BB_UART_RTS_L - @single_brd_lib.RADIO_MLB	3B5 21C4 26C3 26C8 30C4
BB_UART_RXD	UART1_TXD - @single_brd_lib.SINGLE_BRD BB_UART_RXD - @single_brd_lib.RADIO_MLB	3B5 15B5 21C4 26C3 26C8 30C4
BB_UART_TXD	UART1_RXD - @single_brd_lib.SINGLE_BRD BB_UART_TXD - @single_brd_lib.RADIO_MLB	3B5 15B5 21C4 26C3 26C8 30C4
BB_USB_VBUS	BB_VBUS_DET - @single_brd_lib.SINGLE_BRD BB_USB_VBUS - @single_brd_lib.RADIO_MLB	13B3 21C4 26C3 26C8 29A5
BOARD_ID	BOARD_ID - @single_brd_lib.RADIO_MLB	28D4
BT_PCM_CLK	45_I2S3_BCLK -	3C4 21B4

sydzi.taobao.com

思源电子 sydzi.taobao.com 为您提供维修手机,笔记本,电脑图纸

	@single_brd_lib.SINGLE_BRD	
	BT_PCM_CLK -	26B8 42B3
	@single_brd_lib.RADIO_MLB	
BT_PCM_IN	I2S3_DOUT -	3C4 21B4
	@single_brd_lib.SINGLE_BRD	
	BT_PCM_IN -	26B8 42B3
	@single_brd_lib.RADIO_MLB	
BT_PCM_OUT	I2S3_DIN -	3C4 21B4
	@single_brd_lib.SINGLE_BRD	
	BT_PCM_OUT -	26B8 42B3
	@single_brd_lib.RADIO_MLB	
BT_PCM_SYNC	I2S3_LRCLK -	3C4 21B4
	@single_brd_lib.SINGLE_BRD	
	BT_PCM_SYNC -	26B8 42B3
	@single_brd_lib.RADIO_MLB	
BT_REG_ON	BT_REG_ON -	13B7 21C4
	@single_brd_lib.SINGLE_BRD	
	BT_REG_ON -	26B8 26C1 42C7
	@single_brd_lib.RADIO_MLB	
BT_UART_CTS_L	UART3_RTS_L -	3B5 21B4
	@single_brd_lib.SINGLE_BRD	
	BT_UART_CTS_L -	26B8 42B3
	@single_brd_lib.RADIO_MLB	
BT_UART_RTS_L	UART3_CTS_L -	3B5 21B4
	@single_brd_lib.SINGLE_BRD	
	BT_UART_RTS_L -	26B8 42B3
	@single_brd_lib.RADIO_MLB	
BT_UART_RXD	UART3_TXD -	3A5 21B4
	@single_brd_lib.SINGLE_BRD	
	BT_UART_RXD -	26B5 26B8 42C3
	@single_brd_lib.RADIO_MLB	
BT_UART_TXD	UART3_RXD -	3B5 21B4
	@single_brd_lib.SINGLE_BRD	
	BT_UART_TXD -	26B5 26B8 42C3
	@single_brd_lib.RADIO_MLB	
BT_WAKE	BT_WAKE -	3B7 21B4
	@single_brd_lib.SINGLE_BRD	
	BT_WAKE - @single_brd_lib.RADIO_MLB	26B8 26D1 42C3
CLK32K_AP	CLK32K_WIFI -	13B6 13C6 21B4
	@single_brd_lib.SINGLE_BRD	
	CLK32K_AP -	26C8 42A4 42C8
	@single_brd_lib.RADIO_MLB	
D0_EN	D0_EN - @single_brd_lib.RADIO_MLB	28B2 29A5
DCDC_ADJ	DCDC_ADJ -	30A2 36D8
	@single_brd_lib.RADIO_MLB	
DCDC_EN	DCDC_EN - @single_brd_lib.RADIO_MLB	30C2 36D8
DCDC_MODE	DCDC_MODE -	30B2 36D8
	@single_brd_lib.RADIO_MLB	
DCDC_OUT	DCDC_OUT -	36D6
	@single_brd_lib.RADIO_MLB	
DCDC_PGND	DCDC_PGND -	36C5 36C7 36D6 36D8
	@single_brd_lib.RADIO_MLB	
DEBUG_RST_L	DEBUG_RST_L -	26D3 29B5
	@single_brd_lib.RADIO_MLB	
DEV_HSIC3_RDY	DEV_HSIC3_RDY -	3B5 21D1
	@single_brd_lib.SINGLE_BRD	
	DEV_HSIC3_RDY -	26B8 42A4 42A6
	@single_brd_lib.RADIO_MLB	
DRX_BB_I_N	DRX_BB_I_N -	30C8 31B7
	@single_brd_lib.RADIO_MLB	
DRX_BB_I_P	DRX_BB_I_P -	30C8 31B7
	@single_brd_lib.RADIO_MLB	
DRX_BB_Q_N	DRX_BB_Q_N -	30C8 31B7
	@single_brd_lib.RADIO_MLB	
DRX_BB_Q_P	DRX_BB_Q_P -	30C8 31B7
	@single_brd_lib.RADIO_MLB	
DRX_MODE_SEL_A	DRX_MODE_SEL_A -	30C2 40D7
	@single_brd_lib.RADIO_MLB	
DRX_MODE_SEL_B	DRX_MODE_SEL_B -	30C2 40D7
	@single_brd_lib.RADIO_MLB	
DRX_MODE_SEL_C	DRX_MODE_SEL_C -	30C2 40D7
	@single_brd_lib.RADIO_MLB	
EBI1_CAL	EBI1_CAL -	29D1
	@single_brd_lib.RADIO_MLB	
GPIO_6	GPIO_6 - @single_brd_lib.RADIO_MLB	42C6
GPIO_51	GPIO_51 - @single_brd_lib.RADIO_MLB	26C3 30C2
GPIO_DEBUG_LED	GPIO_DEBUG_LED -	26C3 30B4
	@single_brd_lib.RADIO_MLB	
GPRSYNC	GPRSYNC - @single_brd_lib.RADIO_MLB	31C3
GPS_BB_I_N	GPS_BB_I_N -	30C8 31C4
	@single_brd_lib.RADIO_MLB	
GPS_BB_I_P	GPS_BB_I_P -	30C8 31C4
	@single_brd_lib.RADIO_MLB	
GPS_BB_Q_N	GPS_BB_Q_N -	30C8 31C4
	@single_brd_lib.RADIO_MLB	
GPS_BB_Q_P	GPS_BB_Q_P -	30C8 31C4
	@single_brd_lib.RADIO_MLB	
GSM_PA_HB_EN	GSM_PA_HB_EN -	30B4 36B5
	@single_brd_lib.RADIO_MLB	
GSM_PA_LB_EN	GSM_PA_LB_EN -	30B4 36B5
	@single_brd_lib.RADIO_MLB	
HOST_WAKE_BB	BB_WAKE_AP -	13B6 21D4
	@single_brd_lib.SINGLE_BRD	
	HOST_WAKE_BB -	26C1 26D8 30B2
	@single_brd_lib.RADIO_MLB	
HOST_WAKE_BT	HOST_WAKE_BT -	13B6 21B4
	@single_brd_lib.SINGLE_BRD	
	HOST_WAKE_BT -	26B8 42C3
	@single_brd_lib.RADIO_MLB	
HOST_WAKE_WLAN	HOST_WAKE_WLAN -	13B6 21B4
	@single_brd_lib.SINGLE_BRD	
	HOST_WAKE_WLAN -	26B8 42A4 42B3
	@single_brd_lib.RADIO_MLB	
HSIC_DEVICE_RDY	HSIC_DEVICE_RDY -	42A7 42B4
	@single_brd_lib.RADIO_MLB	
IREF	IREF - @single_brd_lib.RADIO_MLB	30C6 31D8
JTAG_SEL	JTAG_SEL -	42C7
	@single_brd_lib.RADIO_MLB	
LAT_SW1_CTL	LAT_SW1_CTL -	16C5 21A4
	@single_brd_lib.SINGLE_BRD	
	LAT_SW1_CTL -	26B8 26C1 30C2
	@single_brd_lib.RADIO_MLB	
MDM_CLK	MDM_CLK - @single_brd_lib.RADIO_MLB	28B2 29A5
OPT_2	OPT_2 - @single_brd_lib.RADIO_MLB	28C7
PA_ID	PA_ID - @single_brd_lib.RADIO_MLB	28D3
PA_ON_B1B4	PA_ON_B1B4 -	30B4 38D3
	@single_brd_lib.RADIO_MLB	
PA_ON_B2	PA_ON_B2 -	30B4 39C3
	@single_brd_lib.RADIO_MLB	
PA_ON_B5	PA_ON_B5 -	30B4 34C2
	@single_brd_lib.RADIO_MLB	
PA_ON_B8	PA_ON_B8 -	30B4 34C2
	@single_brd_lib.RADIO_MLB	
PA_ON_B13	PA_ON_B13 -	30B4 35B7

	@single_brd_lib.RADIO_MLB	
PA_R0	PA_R0 - @single_brd_lib.RADIO_MLB	30A4 34C2 35B7 36B5 38D3
		39D3
PA_R1	PA_R1 - @single_brd_lib.RADIO_MLB	30C2 34C2 35C7 38D3
PA_R1_VBP	PA_R1_VBP -	35C6
	@single_brd_lib.RADIO_MLB	
PBL_RUN_BB_HSIC1_RDY	PBL_RUN_BB_HSIC1_RDY -	3A7 21D4
	@single_brd_lib.SINGLE_BRD	
	PBL_RUN_BB_HSIC1_RDY -	26B6 26C1 26D8 30B2
	@single_brd_lib.RADIO_MLB	
PMIC_RESOUT_L	PMIC_RESOUT_L -	26C1 28C6 29B5
	@single_brd_lib.RADIO_MLB	
PMIC_SSBI	PMIC_SSBI -	26C6 28C8 29A5
	@single_brd_lib.RADIO_MLB	
PM_MDM_IRQ_L	PM_MDM_IRQ_L -	28C6 30B2
	@single_brd_lib.RADIO_MLB	
PM_USR_IRQ_L	PM_USR_IRQ_L -	28C6 30A2
	@single_brd_lib.RADIO_MLB	
PP_BATT_VCC_CONN	PP_BATT_VCC -	8C7 12D8 14D7 19D7 21C5
	@single_brd_lib.SINGLE_BRD	21C7 21D4 22D8
	PP_BATT_VCC_CONN -	26D1 26D8 27B8 28C8 34C5
	@single_brd_lib.RADIO_MLB	35C5 36C5 36D8 38C5 39C5
		42D7
PP_BATT_VCC_WLAN	PP_BATT_VCC_WLAN -	42D6
	@single_brd_lib.RADIO_MLB	
PP_DIG	PP_DIG - @single_brd_lib.RADIO_MLB	33A3 33C3
PP_LDO1	PP_LDO1 - @single_brd_lib.RADIO_MLB	27B5
PP_LDO2_XO_HS_1V8	PP_LDO2_XO_HS_1V8 -	27B2 29B5 33A5
	@single_brd_lib.RADIO_MLB	
PP_LDO3_AMUX_1V8	PP_LDO3_AMUX_1V8 -	27B2 28B5 28D4 29B6
	@single_brd_lib.RADIO_MLB	
PP_LDO4_VDDA_3V3	PP_LDO4_VDDA_3V3 -	27B2 29B6
	@single_brd_lib.RADIO_MLB	
PP_LDO5_GPS_LNA_2V5	PP_LDO5_GPS_LNA_2V5 -	27B2 41C6
	@single_brd_lib.RADIO_MLB	
PP_LDO5_GPS_LNA_2V5_	PP_LDO5_GPS_LNA_2V5_CONN -	41C8
CONN	@single_brd_lib.RADIO_MLB	
PP_LDO6_RUIM_1V8	PP_LDO6_RUIM_1V8 -	26A3 26A6 26D1 26D6 27A2
	@single_brd_lib.RADIO_MLB	29A6
PP_LDO7_DAC_1V8	PP_LDO7_DAC_1V8 -	27A2 29A6 30C6
	@single_brd_lib.RADIO_MLB	
PP_LDO8_VDDPX_1V2	PP_LDO8_VDDPX_1V2 -	27A2 29A6
	@single_brd_lib.RADIO_MLB	
PP_LDO9_PLL_1V05	PP_LDO9_PLL_1V05 -	27A2 29B6 29B8 29D8
	@single_brd_lib.RADIO_MLB	
PP_LDO10_ADSP_1V05	PP_LDO10_ADSP_1V05 -	27A2 29C6 29D7
	@single_brd_lib.RADIO_MLB	
PP_LDO11_MDSP_FW_1V0	PP_LDO11_MDSP_FW_1V05 -	27A2 29C6 29D6
5	@single_brd_lib.RADIO_MLB	
PP_LDO12_MDSP_SW_1V0	PP_LDO12_MDSP_SW_1V05 -	27A2 29B6 29D7
5	@single_brd_lib.RADIO_MLB	
PP_LDO13_VDDPX_2V95	PP_LDO13_VDDPX_2V95 -	27A2 29A8
	@single_brd_lib.RADIO_MLB	
PP_LDO14_2P65	PP_LDO14_2P65 -	16C2 21A4
	@single_brd_lib.SINGLE_BRD	
	PP_LDO14_2P65 -	26B8 27A2 32C6 37C3 40D6
	@single_brd_lib.RADIO_MLB	41D5
PP_LVS1	PP_LVS1 - @single_brd_lib.RADIO_MLB	26C6 27D1 29B6
PP_PA	PP_PA - @single_brd_lib.RADIO_MLB	34C5 35D5 36C5 36D5 38D5
		39D5
PP_RF1_1_PRX_VCO	PP_RF1_1_PRX_VCO -	33C3 33D3
	@single_brd_lib.RADIO_MLB	
PP_RF1_2_4	PP_RF1_2_4 -	33C7
	@single_brd_lib.RADIO_MLB	
PP_RF1_2_TX_VCO	PP_RF1_2_TX_VCO -	33C6 33D3
	@single_brd_lib.RADIO_MLB	
PP_RF1_3_20_23	PP_RF1_3_20_23 -	33B7
	@single_brd_lib.RADIO_MLB	
PP_RF1_3_20_23_GPS_P	PP_RF1_3_20_23_GPS_PLL -	33A6 33C3
LL	@single_brd_lib.RADIO_MLB	
PP_RF1_3_20_23_RX_PL	PP_RF1_3_20_23_RX_PLL -	33B6 33C3
L	@single_brd_lib.RADIO_MLB	
PP_RF1_3_20_23_TX_PL	PP_RF1_3_20_23_TX_PLL -	33A6 33C3
L	@single_brd_lib.RADIO_MLB	
PP_RF1_4_TX_LO	PP_RF1_4_TX_LO -	33C3 33C6
	@single_brd_lib.RADIO_MLB	
PP_RF1_5_8_9	PP_RF1_5_8_9 -	33B7
	@single_brd_lib.RADIO_MLB	
PP_RF1_5_PRE_DRIVER	PP_RF1_5_PRE_DRIVER -	33B6 33C3
	@single_brd_lib.RADIO_MLB	
PP_RF1_8_TX_MIXER_LB	PP_RF1_8_TX_MIXER_LB_DA -	33B6 33C3
_DA	@single_brd_lib.RADIO_MLB	
PP_RF1_9_HB_DA	PP_RF1_9_HB_DA -	33B6 33C3
	@single_brd_lib.RADIO_MLB	
PP_RF1_11_12_RX_TX_D	PP_RF1_11_12_RX_TX_DIG -	33D5
IG	@single_brd_lib.RADIO_MLB	
PP_RF1_11_12_RX_TX_D	PP_RF1_11_12_RX_TX_DIG_E7 -	33C3 33D3
IG_E7	@single_brd_lib.RADIO_MLB	
PP_RF1_11_PDET_TX	PP_RF1_11_PDET_TX -	33C3 33D3
	@single_brd_lib.RADIO_MLB	
PP_RF1_12_DIG	PP_RF1_12_DIG -	33C3 33D3
	@single_brd_lib.RADIO_MLB	
PP_RF1_13_GPS_LNA	PP_RF1_13_GPS_LNA -	33C3 33D6
	@single_brd_lib.RADIO_MLB	
PP_RF1_14_15	PP_RF1_14_15 -	33D7
	@single_brd_lib.RADIO_MLB	
PP_RF1_14_PRX_LNA	PP_RF1_14_PRX_LNA -	33C3 33D6
	@single_brd_lib.RADIO_MLB	
PP_RF1_15_DRX_LNA	PP_RF1_15_DRX_LNA -	33C3 33D6
	@single_brd_lib.RADIO_MLB	
PP_RF1_17_PRX_LO	PP_RF1_17_PRX_LO -	33C3 33C3
	@single_brd_lib.RADIO_MLB	
PP_RF1_18_DRX_LO	PP_RF1_18_DRX_LO -	33C3 33C3
	@single_brd_lib.RADIO_MLB	
PP_RF1_21_GPS_VCO	PP_RF1_21_GPS_VCO -	33C3 33D3
	@single_brd_lib.RADIO_MLB	
PP_RF1_22_GPS_DIG	PP_RF1_22_GPS_DIG -	33C3 33D3
	@single_brd_lib.RADIO_MLB	
PP_RF2_1_5_6_MASTER_	PP_RF2_1_5_6_MASTER_BIAS_RX_BB -	33B3 33B4
BIAS_RX_BB	@single_brd_lib.RADIO_MLB	
PP_RF2_2_PDET	PP_RF2_2_PDET -	33B3 33C4
	@single_brd_lib.RADIO_MLB	
PP_RF2_3_RX_VCO	PP_RF2_3_RX_VCO -	33B3 33B4
	@single_brd_lib.RADIO_MLB	
PP_RF2_4_TX_VCO	PP_RF2_4_TX_VCO -	33A4 33B3
	@single_brd_lib.RADIO_MLB	
PP_RF2_7_TX_BB	PP_RF2_7_TX_BB -	33B3 33B4
	@single_brd_lib.RADIO_MLB	
PP_SMPS1_MSMC_1V05	PP_SMPS1_MSMC_1V05 -	26D6 27D1 29C8 29C8 29D8
	@single_brd_lib.RADIO_MLB	
PP_SMPS2_RF1_1V3	PP_SMPS2_RF1_1V3 -	27C1 29A5 33D6 33D8
	@single_brd_lib.RADIO_MLB	
PP_SMPS3_MSME_1V8	PP_SMPS3_MSME_1V8 -	26D1 26D6 27A7 27C1 29A6
	@single_brd_lib.RADIO_MLB	29A6 29A6 29A8 29C6 29D7

		29D8 30B8 30C4 33A4
PP_SMPS4_RF2_2V0	PP_SMPS4_RF2_2V0 -	27A7 27B1 33C5
	@single_brd_lib.RADIO_MLB	
PP_SMPS5_DSP_1V05	PP_SMPS5_DSP_1V05 -	27A7 27B1
	@single_brd_lib.RADIO_MLB	
PP_SYNC	BB_PP_SYNC -	3A5 21C4
	@single_brd_lib.SINGLE_BRD	
	PP_SYNC - @single_brd_lib.RADIO_MLB	26C8 30B2
PP_VREG	PP_VREG - @single_brd_lib.RADIO_MLB	27D3
PP_VSW_S1	PP_VSW_S1 -	27D4
	@single_brd_lib.RADIO_MLB	
PP_VSW_S2	PP_VSW_S2 -	27C4
	@single_brd_lib.RADIO_MLB	
PP_VSW_S3	PP_VSW_S3 -	27C4
	@single_brd_lib.RADIO_MLB	
PP_VSW_S4	PP_VSW_S4 -	27B4
	@single_brd_lib.RADIO_MLB	
PP_VSW_S5	PP_VSW_S5 -	27B3
	@single_brd_lib.RADIO_MLB	
PP_WLAN_VDDIO_1V8	PP_WLAN_VDDIO_1V8 -	42C5
	@single_brd_lib.RADIO_MLB	
PP_WL_BT_VDDIO_AP	PP1V8_SDRAM -	3C8 4C7 9B3 12B2 12C1
	@single_brd_lib.SINGLE_BRD	12C7 13A7 15C5 21C4
	PP_WL_BT_VDDIO_AP -	26C8 42A7 42C4
	@single_brd_lib.RADIO_MLB	
PP_XO_1P8_FILT	PP_XO_1P8_FILT -	33A4 33C3
	@single_brd_lib.RADIO_MLB	
PRX_B5_B8_1	PRX_B5_B8_1 -	30B2 32B4
	@single_brd_lib.RADIO_MLB	
PRX_BB_I_N	PRX_BB_I_N -	30C8 31C7
	@single_brd_lib.RADIO_MLB	
PRX_BB_I_P	PRX_BB_I_P -	30C8 31C7
	@single_brd_lib.RADIO_MLB	
PRX_BB_Q_N	PRX_BB_Q_N -	30C8 31C7
	@single_brd_lib.RADIO_MLB	
PRX_BB_Q_P	PRX_BB_Q_P -	30C8 31C7
	@single_brd_lib.RADIO_MLB	
PS_HOLD	PS_HOLD - @single_brd_lib.RADIO_MLB	28C8 30B2
PS_HOLD_PMIC	PS_HOLD_PMIC -	26C3 28C7
	@single_brd_lib.RADIO_MLB	
RADIO_ON_L	RADIO_ON_L -	3A7 21D4
	@single_brd_lib.SINGLE_BRD	
	RADIO_ON_L -	26B6 26D3 26D8 28C8
	@single_brd_lib.RADIO_MLB	
REF_BYP_8014_F2	REF_BYP_8014_F2 -	27C6
	@single_brd_lib.RADIO_MLB	
RESET_DET_L	BB_RESET_DET_L -	3A5 21D4
	@single_brd_lib.SINGLE_BRD	
	RESET_DET_L -	26C1 26D8 30B4
	@single_brd_lib.RADIO_MLB	
RESET_PMU_L	BB_RST_PMU_L -	13B7 21D4
	@single_brd_lib.SINGLE_BRD	
	RESET_PMU_L -	26D3 26D8 28C8
	@single_brd_lib.RADIO_MLB	
RF_CLK	RF_CLK - @single_brd_lib.RADIO_MLB	28B1 31D8
RF_RBIAS	RF_RBIAS -	31D7
	@single_brd_lib.RADIO_MLB	
RF_RESET_L	RESET_1V8_L -	2B7 12B2 13B6 15B4 18B1
	@single_brd_lib.SINGLE_BRD	21D4 22B8
	RF_RESET_L -	26C3 26D8
	@single_brd_lib.RADIO_MLB	
RREFEXT	RREFEXT - @single_brd_lib.RADIO_MLB	29A5
RSVD	RSVD - @single_brd_lib.RADIO_MLB	28B3
RTR_SSBI_PRX_DRX	RTR_SSBI_PRX_DRX -	30B2 31C1
	@single_brd_lib.RADIO_MLB	
RTR_SSBI_TX_GPS	RTR_SSBI_TX_GPS -	30B2 31C1
	@single_brd_lib.RADIO_MLB	
S1_GND	S1_GND - @single_brd_lib.RADIO_MLB	27C3 27C7 28B6
S2_GND	S2_GND - @single_brd_lib.RADIO_MLB	27C7 28B6
S3_GND	S3_GND - @single_brd_lib.RADIO_MLB	27C3 27C7 28B6
S4_GND	S4_GND - @single_brd_lib.RADIO_MLB	27C7 28B6
S5_GND	S5_GND - @single_brd_lib.RADIO_MLB	27B3 27C8 28B6
SIMCRD_CLK_CONN	SIMCRD_CLK_CONN -	26A3 26A6 26C1 30C4
	@single_brd_lib.RADIO_MLB	
SIMCRD_IO_CONN	SIMCRD_IO_CONN -	26A4 26A4 26C1 30C4
	@single_brd_lib.RADIO_MLB	
SIMCRD_RST_CONN	SIMCRD_RST_CONN -	26A4 26A6 26C1 30C4
	@single_brd_lib.RADIO_MLB	
SIM_TRAY_DETECT	SIM_TRAY_DETECT -	26A3 26A4 26C1 30C4
	@single_brd_lib.RADIO_MLB	
SLEEP_CLK_32K	SLEEP_CLK_32K -	26C6 28B2 29B5
	@single_brd_lib.RADIO_MLB	
SPI2_CLK	SPI2_CLK -	30C4 41D5
	@single_brd_lib.RADIO_MLB	
SPI2_CS_L	SPI2_CS_L -	30C4 41D5
	@single_brd_lib.RADIO_MLB	
SPI2_DATA_MOSI	SPI2_DATA_MOSI -	30C4 41D5
	@single_brd_lib.RADIO_MLB	
SPI_CLK	SPI_CLK - @single_brd_lib.RADIO_MLB	30A8 30C4
SPI_CS_L	SPI_CS_L -	30A6 30C4
	@single_brd_lib.RADIO_MLB	
SPI_DATA_MISO	SPI_DATA_MISO -	30A6 30C4
	@single_brd_lib.RADIO_MLB	
SPI_DATA_MOSI	SPI_DATA_MOSI -	30A8 30C4
	@single_brd_lib.RADIO_MLB	
TX_BB_I_N	TX_BB_I_N -	30C6 31C4
	@single_brd_lib.RADIO_MLB	
TX_BB_I_P	TX_BB_I_P -	30C6 31C4
	@single_brd_lib.RADIO_MLB	
TX_BB_Q_N	TX_BB_Q_N -	30C6 31C4
	@single_brd_lib.RADIO_MLB	
TX_BB_Q_P	TX_BB_Q_P -	30C6 31C4
	@single_brd_lib.RADIO_MLB	
TX_GTR_THRESH	LED_DRIVE_GSMB -	19C6 21C4
	@single_brd_lib.SINGLE_BRD	
	TX_GTR_THRESH -	26D8 30C2
	@single_brd_lib.RADIO_MLB	
VDDPX_BIAS	VDDPX_BIAS -	28D3 29B6
	@single_brd_lib.RADIO_MLB	
VREF_DAC_BIAS	VREF_DAC_BIAS -	28C4 30C6
	@single_brd_lib.RADIO_MLB	
VSIM_VPP	VSIM_VPP -	26A5
	@single_brd_lib.RADIO_MLB	
VTUNE_SHDR	VTUNE_SHDR -	31C3
	@single_brd_lib.RADIO_MLB	
WAN_DIO	WAN_DIO - @single_brd_lib.RADIO_MLB	30B4 31C4
WAN_DIO_RX_ON	WAN_DIO_RX_ON -	30B4 31C4
	@single_brd_lib.RADIO_MLB	
WAN_GPRSYNC	WAN_GPRSYNC -	30B2 31C4
	@single_brd_lib.RADIO_MLB	
WAN_GP_DATA0	WAN_GP_DATA0 -	30B2 31C4
	@single_brd_lib.RADIO_MLB	
WAN_GP_DATA1	WAN_GP_DATA1 -	30B2 31C4
	@single_brd_lib.RADIO_MLB	

WAN_GP_DATA2	WAN_GP_DATA2 -	30B2 31C4
	@single_brd_lib.RADIO_MLB	
WLAN_BUCK_OUT	WLAN_BUCK_OUT -	42C7
	@single_brd_lib.RADIO_MLB	
WLAN_CLK32K	WLAN_CLK32K -	42C7
	@single_brd_lib.RADIO_MLB	
WLAN_HSIC3_RESUME	WLAN_HSIC3_RESUME -	3B7 21A4
	@single_brd_lib.SINGLE_BRD	
	WLAN_HSIC3_RESUME -	26D8 42B5
	@single_brd_lib.RADIO_MLB	
WLAN_REG_ON	WIFI_REG_ON -	13B7 21C4
	@single_brd_lib.SINGLE_BRD	
	WLAN_REG_ON -	26C1 26C8 42A4 42A8 42C7
	@single_brd_lib.RADIO_MLB	
WLAN_REG_ON_RC	WLAN_REG_ON_RC -	42A7
	@single_brd_lib.RADIO_MLB	
WLAN_SR_VLX1	WLAN_SR_VLX1 -	42B7
	@single_brd_lib.RADIO_MLB	
WLAN_TX_BLANK	WLAN_TX_BLANK -	30B2 42A4
	@single_brd_lib.RADIO_MLB	
WLAN_UART_RXD	UART4_TXD -	3A5 21C4
	@single_brd_lib.SINGLE_BRD	
	WLAN_UART_RXD -	26B8 42A4 42B4
	@single_brd_lib.RADIO_MLB	
WLAN_UART_TXD	UART4_RXD -	3A5 21B4
	@single_brd_lib.SINGLE_BRD	
	WLAN_UART_TXD -	26C8 42A4 42B4
	@single_brd_lib.RADIO_MLB	
XO_GND	XO_GND - @single_brd_lib.RADIO_MLB	28A4 28B3 28B4
XO_REF	XO_REF - @single_brd_lib.RADIO_MLB	31D7
XO_THERM_Y1	XO_THERM_Y1 -	28B4
	@single_brd_lib.RADIO_MLB	
XTAL19M_IN	XTAL19M_IN -	28B4
	@single_brd_lib.RADIO_MLB	
XTAL19M_OUT	XTAL19M_OUT -	28B4
	@single_brd_lib.RADIO_MLB	

思源电子 sydzi.taobao.com 为您提供维修手机.笔记本.电脑图纸

Title: Cref Part Report
Design: single_brd
Date: Apr 30 16:27:24 2012

BS1	PCB_STANDOFF	single_brd[21B7]
BS2	PCB_STANDOFF	single_brd[21B7]
BS3	PCB_STANDOFF	single_brd[21B7]
BS4	PCB_STANDOFF	single_brd[21B7]
BS5	PCB_STANDOFF	single_brd[21B7]
C1	CAP_01005	single_brd[2A6]
C2	CAP_0201	single_brd[2C6]
C3	CAP_0204	single_brd[6D3]
C4	CAP_01005	single_brd[7D5]
C5	CAP_01005	single_brd[7D5]
C6	CAP_01005	single_brd[7D3]
C7	CAP_01005	single_brd[7D3]
C8	CAP_01005	single_brd[7B4]
C9	CAP_01005	single_brd[21C6]
C10	CAP_201	single_brd[12D5]
C11	CAP_0201	single_brd[14A1]
C12	CAP_01005	single_brd[16B6]
C13	CAP_01005	single_brd[16B6]
C14	CAP_01005	single_brd[16B5]
C15	CAP_01005	single_brd[16B5]
C16	CAP_0402-2	single_brd[12D8]
C17	CAP_01005	single_brd[18D3]
C18	CAP_01005	single_brd[18D3]
C19	CAP_01005	single_brd[18D3]
C20	CAP_01005	single_brd[2D6]
C21	CAP_01005	single_brd[2D6]
C22	CAP_01005	single_brd[2D6]
C23	CAP_0201	single_brd[2C7]
C24	CAP_01005	single_brd[2D6]
C25	CAP_0201	single_brd[2C6]
C26	CAP_01005	single_brd[9C6]
C27	CAP_0201-MUR	single_brd[11B4]
C28	CAP_0201	single_brd[2C6]
C29	CAP_0201-MUR	single_brd[14D3]
C30	CAP_0610	single_brd[5A7]
C31	CAP_201	single_brd[12A5]
C32	CAP_01005	single_brd[2D4]
C33	CAP_0402-2	single_brd[12D8]
C34	CAP_01005	single_brd[2D4]
C35	CAP_01005	single_brd[2D4]
C36	CAP_01005	single_brd[2C2]
C37	CAP_01005	single_brd[2B2]
C38	CAP_0201-MUR	single_brd[15C7]
C39	CAP_01005	single_brd[15C5]
C40	CAP_0610	single_brd[4B7]
C41	CAP_01005	single_brd[4D7]
C42	CAP_0402-2	single_brd[4B7]
C43	CAP_0204	single_brd[4B7]
C44	CAP_01005	single_brd[11C2]
C45	CAP_01005	single_brd[8B4]
C46	CAP_0402-2	single_brd[12D7]
C47	CAP_0402	single_brd[12C3]
C48	CAP_0204	single_brd[4B7]
C49	CAP_0204	single_brd[4C7]
C50	CAP_0201-MUR	single_brd[6C4]
C51	CAP_01005	single_brd[10C2]
C52	CAP_0402-2	single_brd[4C7]
C53	CAP_0204	single_brd[4C7]
C54	CAP_0610	single_brd[4B7]
C55	CAP_01005	single_brd[9B7]
C56	CAP_01005	single_brd[11B6]
C57	CAP_0610	single_brd[4C6]
C58	CAP_0402	single_brd[12D1]
C59	CAP_0204	single_brd[4C6]
C60	CAP_0204	single_brd[4B6]
C61	CAP_01005	single_brd[9B7]
C62	CAP_01005	single_brd[11C6]
C63	CAP_01005	single_brd[11C6]
C64	CAP_01005	single_brd[9B7]
C65	CAP_01005	single_brd[9B6]
C66	CAP_0402	single_brd[12C2]
C67	CAP_01005	single_brd[11B4]
C68	CAP_0610	single_brd[5D6]
C69	CAP_0402-2	single_brd[12C2]
C70	CAP_0402-2	single_brd[12C2]
C71	CAP_0402-1	single_brd[5A7]
C72	CAP_0204	single_brd[5C7]
C73	CAP_01005	single_brd[11B2]
C74	CAP_0610	single_brd[5C7]
C75	CAP_0610	single_brd[5C7]
C76	CAP_0402-2	single_brd[12C2]
C77	CAP_0402-2	single_brd[12C1]
C78	CAP_01005	single_brd[16A3]
C79	CAP_01005	single_brd[17C8]
C80	CAP_0610	single_brd[5C7]
C81	CAP_0204	single_brd[5C6]
C82	CAP_01005	single_brd[20D7]
C83	CAP_0204	single_brd[5D6]
C84	CAP_01005	single_brd[20D7]
C85	CAP_0402-2	single_brd[19D2]
C86	CAP_0402-1	single_brd[5A6]
C87	CAP_0204	single_brd[5C7]
C88	CAP_01005	single_brd[18B3]
C89	CAP_0204	single_brd[5C7]
C90	CAP_01005	single_brd[18B3]
C91	CAP_0204	single_brd[5C6]
C92	CAP_0402-1	single_brd[5B6]
C93	CAP_01005	single_brd[18C3]
C94	CAP_01005	single_brd[18C3]
C95	CAP_0201-1	single_brd[4B3]
C96	CAP_0402-1	single_brd[13B4]
C97	CAP_0204	single_brd[5D6]
C98	CAP_0204	single_brd[5C6]
C99	CAP_01005	single_brd[16A6]
C100	CAP_0204	single_brd[5C6]
C100_RF	CAP_01005	radio_mlb[26A6]single_brd[21]
C101	CAP_01005	single_brd[8C5]
C101_RF	CAP_01005	radio_mlb[26A5]single_brd[21]
C102	CAP_01005	single_brd[16A5]
C103	CAP_0610	single_brd[5C7]
C104	CAP_0201	single_brd[5B6]
C105	CAP_01005	single_brd[10B7]
C106	CAP_01005	single_brd[4A8]
C107	CAP_0402-1	single_brd[5A6]
C108	CAP_01005	single_brd[4A8]
C109	CAP_0402-2	single_brd[12C1]
C110	CAP_0204	single_brd[5C6]
C111	CAP_01005	single_brd[4A7]
C112	CAP_0204	single_brd[5C6]
C113	CAP_01005	single_brd[4A7]
C114	CAP_01005	single_brd[4A6]
C115	CAP_0204	single_brd[5C6]
C116	CAP_0201	single_brd[5B6]
C117	CAP_01005	single_brd[4A6]
C118	CAP_01005	single_brd[4A5]
C119	CAP_0402-1	single_brd[5A5]
C120	CAP_01005	single_brd[4A5]
C121	CAP_0204	single_brd[5D6]
C122	CAP_0610	single_brd[5C6]
C123	CAP_0402-1	single_brd[13B2]
C124	CAP_0204	single_brd[5C6]
C125	CAP_0402	single_brd[13A1]
C126	CAP_0402-1	single_brd[5C7]
C127	CAP_0201	single_brd[16B6]
C128	CAP_0201	single_brd[5B6]
C129	CAP_0402	single_brd[18C2]
C130	CAP_01005	single_brd[17C7]
C131	CAP_0402	single_brd[13A2]
C132	CAP_01005	single_brd[13B2]
C133	CAP_0610	single_brd[5C7]
C134	CAP_0204	single_brd[5C6]
C135	CAP_0402-1	single_brd[13B1]
C136	CAP_01005	single_brd[6C5]
C137	CAP_201	single_brd[17B4]
C138	CAP_01005	single_brd[10C2]
C139	CAP_01005	single_brd[17B3]
C140	CAP_0402	single_brd[12C3]
C141	CAP_0402-1	single_brd[5D3]
C142	CAP_0402-1	single_brd[5D3]
C143	CAP_01005	single_brd[10B2]
C144	CAP_01005	single_brd[6C5]
C145	CAP_0402	single_brd[12D3]
C146	CAP_0201	single_brd[17B4]
C147	CAP_01005	single_brd[17B4]
C148	CAP_0201	single_brd[17A6]
C149	CAP_0402-1	single_brd[17D4]
C150	CAP_01005	single_brd[17B3]
C151	CAP_0204	single_brd[5C3]
C152	CAP_0610	single_brd[5D3]
C153	CAP_0204	single_brd[5D3]
C154	CAP_P_0603-LLP	single_brd[17A4]
C155	CAP_0201	single_brd[17A3]
C156	CAP_0402-1	single_brd[17D3]
C157	CAP_0201	single_brd[17B3]
C158	CAP_0204	single_brd[5C3]
C159	CAP_01005	single_brd[12A8]
C160	CAP_0610	single_brd[5D3]
C161	CAP_0204	single_brd[5D3]
C162	CAP_0402-1	single_brd[17D3]
C163	CAP_201	single_brd[17D2]
C164	CAP_0402	single_brd[17A7]
C165	CAP_01005	single_brd[17D2]
C166	CAP_0204	single_brd[5C3]
C167	CAP_01005	single_brd[12A7]
C168	CAP_01005	single_brd[12A5]
C169	CAP_0204	single_brd[5D3]
C170	CAP_P_0402	single_brd[17B4]
C171	CAP_01005	single_brd[19B4]
C172	CAP_01005	single_brd[5C3]
C173	CAP_01005	single_brd[5C3]
C174	CAP_0204	single_brd[5C3]
C175	CAP_01005	single_brd[19B4]
C176	CAP_01005	single_brd[16B7]
C177	CAP_0204	single_brd[5D3]
C178	CAP_0201-MUR	single_brd[6C4]
C179	CAP_01005	single_brd[19A5]
C179_RF	CAP_0402-1	radio_mlb[33C7]single_brd[21]
C180	CAP_0204	single_brd[6D4]
C181	CAP_01005	single_brd[19B5]
C182	CAP_0402-1	single_brd[6D3]
C183	CAP_0402-1	single_brd[6D3]
C184	CAP_0402-1	single_brd[6D3]
C185	CAP_0204	single_brd[6D3]
C186	CAP_0204	single_brd[6D3]
C187	CAP_0402-1	single_brd[6D2]
C188	CAP_0204	single_brd[6D2]
C189	CAP_01005	single_brd[19B3]
C190	CAP_402	single_brd[7D4]
C190_RF	CAP_0402	radio_mlb[33B5]single_brd[21]
C191	CAP_01005	single_brd[7D2]
C192	CAP_01005	single_brd[11D6]
C193	CAP_603	single_brd[11C2]
C194	CAP_0201-MUR	single_brd[11C7]
C195	CAP_0402	single_brd[11C2]
C196	CAP_01005	single_brd[11C6]
C197	CAP_01005	single_brd[8B7]
C198	CAP_01005	single_brd[11D5]
C199	CAP_01005	single_brd[11B6]
C200	CAP_01005	single_brd[11C3]
C201	CAP_01005	single_brd[11C6]
C201_RF	CAP_0402	radio_mlb[27B7]single_brd[21]
C202	CAP_01005	single_brd[11C6]
C202_RF	CAP_0402	radio_mlb[27C7]single_brd[21]
C203	CAP_0402-1	single_brd[10D2]
C203_RF	CAP_0402	radio_mlb[27B7]single_brd[21]
C204	CAP_0402-2	single_brd[12C7]
C204_RF	CAP_0402	radio_mlb[27C7]single_brd[21]
C205	CAP_01005	single_brd[12D5]
C206	CAP_01005	single_brd[12C3]
C206_RF	CAP_01005	radio_mlb[27C7]single_brd[21]
C207	CAP_01005	single_brd[7B3]
C207_RF	CAP_0603	radio_mlb[27C3]single_brd[21]
C208	CAP_01005	single_brd[12D3]
C208_RF	CAP_0603	radio_mlb[27C3]single_brd[21]
C209	CAP_0402-1	single_brd[6D2]
C209_RF	CAP_0603	radio_mlb[27C3]single_brd[21]
C210	CAP_01005	single_brd[11B6]
C210_RF	CAP_0603	radio_mlb[27B3]single_brd[21]
C211	CAP_01005	single_brd[11B6]
C211_RF	CAP_0603	radio_mlb[27B3]single_brd[21]
C212	CAP_01005	single_brd[11B6]
C212_RF	CAP_0201-MUR	radio_mlb[27A5]single_brd[21]
C213	CAP_01005	single_brd[13A2]
C213_RF	CAP_0201-MUR	radio_mlb[27A5]single_brd[21]
C214	CAP_01005	single_brd[13A2]
C214_RF	CAP_0201-MUR	radio_mlb[27A5]single_brd[21]
C215	CAP_0201-MUR	single_brd[16C3]
C215_RF	CAP_0201-MUR	radio_mlb[27A4]single_brd[21]
C216	CAP_0201-MUR	single_brd[8B4]
C216_RF	CAP_0201-MUR	radio_mlb[27A4]single_brd[21]
C217	CAP_0402	single_brd[17A6]
C217_RF	CAP_0201-MUR	radio_mlb[27A4]single_brd[21]
C218	CAP_402	single_brd[9C6]
C218_RF	CAP_0201-MUR	radio_mlb[27A4]single_brd[21]
C219	CAP_402	single_brd[9C6]
C219_RF	CAP_0201-MUR	radio_mlb[27A4]single_brd[21]
C220	CAP_01005	single_brd[10C7]
C220_RF	CAP_0402-1	radio_mlb[27A3]single_brd[21]
C221	CAP_01005	single_brd[10C7]
C221_RF	CAP_0402-1	radio_mlb[27A3]single_brd[21]
C222	CAP_01005	single_brd[9C7]
C222_RF	CAP_0402-1	radio_mlb[27A3]single_brd[21]
C223	CAP_01005	single_brd[9C7]
C223_RF	CAP_01005	radio_mlb[27B8]single_brd[21]
C224	CAP_01005	single_brd[9C7]
C225	CAP_01005	single_brd[9C7]
C226	CAP_01005	single_brd[10C6]
C226_RF	CAP_0402	radio_mlb[27C8]single_brd[21]
C227	CAP_01005	single_brd[9C7]
C228	CAP_01005	single_brd[9C7]
C229	CAP_01005	single_brd[10C6]
C229_RF	CAP_0402-1	radio_mlb[27A3]single_brd[21]
C230	CAP_01005	single_brd[9C7]
C230_RF	CAP_0402-1	radio_mlb[27A2]single_brd[21]
C231	CAP_01005	single_brd[9C6]
C231_RF	CAP_0201-MUR	radio_mlb[27D3]single_brd[21]
C232	CAP_402	single_brd[10C4]
C233	CAP_402	single_brd[10C4]
C233_RF	CAP_01005	radio_mlb[27C2]single_brd[21]
C234	CAP_402	single_brd[10B5]
C234_RF	CAP_0201-MUR	radio_mlb[27A5]single_brd[21]
C235	CAP_01005	single_brd[10B2]
C235_RF	CAP_0402-1	radio_mlb[27B8]single_brd[21]
C236	CAP_01005	single_brd[10B2]
C236_RF	CAP_0402-1	radio_mlb[27B8]single_brd[21]
C237	CAP_402	single_brd[10B6]
C237_RF	CAP_0402-1	radio_mlb[27B8]single_brd[21]
C238	CAP_402	single_brd[10B6]
C239	CAP_0402	single_brd[17A6]
C240	CAP_01005	single_brd[16B3]
C241	CAP_01005	single_brd[8B3]
C242	CAP_01005	single_brd[16D7]
C243	CAP_01005	single_brd[18D3]
C244	CAP_01005	single_brd[8B4]
C245	CAP_01005	single_brd[10D4]
C246	CAP_0201	single_brd[17A7]
C247	CAP_0402-2	single_brd[12D7]
C248	CAP_0201-MUR	single_brd[20A6]
C249	CAP_0201-MUR	single_brd[20B7]
C250	CAP_0402-2	single_brd[12D6]
C251	CAP_0402-2	single_brd[12D6]
C252	CAP_0402-1	single_brd[13B4]
C253	CAP_01005	single_brd[11A4]
C254	CAP_0402	single_brd[13A1]
C255	CAP_0201-1	single_brd[16B7]
C256	CAP_0402	single_brd[11C3]
C257	CAP_01005	single_brd[17A3]
C258	CAP_01005	single_brd[18B3]
C259	CAP_01005	single_brd[7C3]
C260	CAP_0402-2	single_brd[12B8]
C261	CAP_0402-2	single_brd[12B8]
C262	CAP_0402-1	single_brd[13B3]
C263	CAP_0402-2	single_brd[12B8]
C264	CAP_0402-2	single_brd[12B8]
C265	CAP_01005	single_brd[12B8]
C266	CAP_0201-MUR	single_brd[12C8]
C267	CAP_0402-2	single_brd[12B8]
C268	CAP_0402-2	single_brd[12B8]
C269	CAP_0402-2	single_brd[12C7]
C270	CAP_0402-2	single_brd[12B7]
C271	CAP_0402-2	single_brd[12B7]
C272	CAP_0402	single_brd[12C7]
C273	CAP_01005	single_brd[21D6]
C274	CAP_01005	single_brd[7C2]
C275	CAP_01005	single_brd[21C6]
C276	CAP_01005	single_brd[12A7]
C277	CAP_01005	single_brd[12B7]
C278	CAP_402	single_brd[12B7]
C279	CAP_01005	single_brd[21D6]
C280	CAP_01005	single_brd[7C2]
C281	CAP_0402-2	single_brd[12C7]
C282	CAP_402	single_brd[12B7]
C283	CAP_01005	single_brd[12A6]
C284	CAP_01005	single_brd[7C2]
C285	CAP_01005	single_brd[12A5]
C286	CAP_01005	single_brd[20C5]
C287	CAP_01005	single_brd[20C6]
C288	CAP_0402	single_brd[11C2]
C289	CAP_0402-1	single_brd[8C6]
C290	CAP_0402	single_brd[12D4]
C291	CAP_0402	single_brd[12C3]
C292	CAP_0402	single_brd[12D4]
C293	CAP_0402-2	single_brd[12C2]
C294	CAP_0402	single_brd[12D4]
C295	CAP_0402	single_brd[12D2]
C296	CAP_0402	single_brd[12D4]
C297	CAP_0402-2	single_brd[12D7]
C298	CAP_0201-MUR	single_brd[14A8]
C299	CAP_402	single_brd[12B4]
C300	CAP_01005	single_brd[14A7]
C301	CAP_0402	single_brd[12D1]
C302	CAP_0402	single_brd[6C2]
C303	CAP_0402	single_brd[12D2]
C304	CAP_0402	single_brd[15C3]
C305	CAP_0402	single_brd[12D2]
C306	CAP_402	single_brd[12B4]
C306_RF	CAP_01005	radio_mlb[28B4]single_brd[21]
C307	CAP_0402-1	single_brd[6D2]
C308	CAP_0402-2	single_brd[12C3]
C308_RF	CAP_01005	radio_mlb[28B2]single_brd[21]
C309	CAP_01005	single_brd[14C4]
C310	CAP_0402	single_brd[12D2]
C311	CAP_01005	single_brd[8B7]
C312	CAP_0402	single_brd[12D4]
C313	CAP_01005	single_brd[8B7]
C314	CAP_01005	single_brd[8B6]
C315	CAP_0402-2	single_brd[12C1]
C316	CAP_0402-2	single_brd[12C2]
C317	CAP_201	single_brd[13D4]
C318	CAP_0201-MUR	single_brd[13C4]
C319	CAP_201	single_brd[13C4]
C320	CAP_0402-1	single_brd[13B4]
C321	CAP_0402-1	single_brd[13B4]
C322	CAP_01005	single_brd[12A4]
C323	CAP_01005	single_brd[13C4]
C324	CAP_0402-1	single_brd[13B4]
C325	CAP_0402-2	single_brd[12D6]
C326	CAP_01005	single_brd[13C4]
C327	CAP_0402-1	single_brd[13B3]
C328	CAP_0201-MUR	single_brd[13B3]
C329	CAP_0402-2	single_brd[12C1]
C330	CAP_0402-2	single_brd[12C1]
C331	CAP_0603-1	single_brd[14D6]
C332	CAP_0402-2	single_brd[14D7]
C333	CAP_0402-2	single_brd[14D7]
C334	CAP_0201-MUR	single_brd[14B8]
C335	CAP_0402-2	single_brd[14D7]
C336	CAP_01005	single_brd[14B8]
C337	CAP_0201-1	single_brd[14D6]
C338	CAP_0201-MUR	single_brd[15B4]
C339	CAP_201	single_brd[14D4]
C340	CAP_402	single_brd[14D3]
C341	CAP_0201-MUR	single_brd[14D3]
C342	CAP_0201	single_brd[14D5]
C343	CAP_0201	single_brd[14B2]
C344	CAP_01005	single_brd[14B2]
C345	CAP_01005	single_brd[14B2]
C346	CAP_01005	single_brd[19A5]
C347	CAP_0201-MUR	single_brd[14B1]
C348	CAP_0603-1	single_brd[14D5]
C349	CAP_201	single_brd[12A4]
C350	CAP_0402	single_brd[18C2]
C351	CAP_0402	single_brd[18C1]
C352	CAP_01005	single_brd[16C2]
C353	CAP_0402	single_brd[18C1]
C354	CAP_01005	single_brd[10C6]
C355	CAP_01005	single_brd[16C3]
C356	CAP_01005	single_brd[10C6]
C357	CAP_0402-2	single_brd[12C8]
C358	CAP_0402-2	single_brd[12C8]
C359	CAP_01005	single_brd[16C3]
C360	CAP_01005	single_brd[14C3]
C361	CAP_01005	single_brd[14D2]
C362	CAP_01005	single_brd[16A3]
C363	CAP_01005	single_brd[14C2]
C364	CAP_01005	single_brd[21C8]
C365	CAP_01005	single_brd[21C8]
C366	CAP_01005	single_brd[21C8]
C367	CAP_01005	single_brd[21C7]
C368	CAP_01005	single_brd[14D6]
C369	CAP_0402	single_brd[17D7]
C370	CAP_402	single_brd[17D7]
C371	CAP_402	single_brd[17D6]
C372	CAP_0201-MUR	single_brd[17D6]
C373	CAP_0201	single_brd[17A6]
C374	CAP_01005	single_brd[8C6]
C375	CAP_0402-2	single_brd[12D7]
C376	CAP_0201	single_brd[17A3]
C377	CAP_0201	single_brd[17D1]
C378	CAP_01005	single_brd[16C3]
C379	CAP_01005	single_brd[19B7]
C380	CAP_01005	single_brd[15C6]
C381	CAP_01005	single_brd[15C5]
C382	CAP_01005	single_brd[15C4]
C383	CAP_0402-2	single_brd[12D7]
C384	CAP_0402-2	single_brd[12D6]
C386	CAP_0402-2	single_brd[19D7]
C387	CAP_0402-2	single_brd[19D7]
C389	CAP_0201-MUR	single_brd[20B6]
C390	CAP_0201-MUR	single_brd[20B7]
C391	CAP_0201-MUR	single_brd[20A6]
C392	CAP_01005	single_brd[20B5]
C393	CAP_01005	single_brd[20A5]
C394	CAP_0402-2	single_brd[19D5]
C395	CAP_01005	single_brd[20C6]
C396	CAP_0402-2	single_brd[19D5]
C397	CAP_01005	single_brd[20A5]
C400	CAP_01005	single_brd[20C5]
C402	CAP_01005	single_brd[11C3]
C403	CAP_0201-MUR	single_brd[20B6]
C404	CAP_01005	single_brd[20B6]
C406	CAP_01005	single_brd[20C4]
C407	CAP_01005	single_brd[11C3]
C408	CAP_01005	single_brd[19C5]
C409	CAP_01005	single_brd[20C3]
C410	CAP_01005	single_brd[11C3]
C412	CAP_0201-MUR	single_brd[10C5]
C413	CAP_01005	single_brd[10D5]
C414	CAP_0402-1	single_brd[10D5]
C416	CAP_01005	single_brd[10D5]
C417	CAP_0201-MUR	single_brd[10C5]
C420	CAP_201	single_brd[10D4]
C421	CAP_01005	single_brd[10D4]
C422	CAP_402	single_brd[10D3]
C424	CAP_0402	single_brd[10B4]
C425	CAP_402	single_brd[10C3]
C429	CAP_402	single_brd[10C3]
C434	CAP_402	single_brd[19D4]
C436	CAP_0402-2	single_brd[19D2]
C438	CAP_01005	single_brd[19D2]
C439	CAP_201	single_brd[18C2]
C440	CAP_01005	single_brd[18C2]
C500	CAP_01005	single_brd[14C2]
C501	CAP_01005	single_brd[14C2]
C501_RF	CAP_0201-MUR	radio_mlb[29D8]single_brd[21]
C502_RF	CAP_0201-MUR	radio_mlb[29D7]single_brd[21]
C503_RF	CAP_0201-MUR	radio_mlb[29D7]single_brd[21]
C504_RF	CAP_0201-MUR	radio_mlb[29D7]single_brd[21]
C505_RF	CAP_0201-MUR	radio_mlb[29D7]single_brd[21]
C506_RF	CAP_0201-MUR	radio_mlb[29D8]single_brd[21]
C507_RF	CAP_0201-MUR	radio_mlb[29D7]single_brd[21]
C508_RF	CAP_0201-MUR	radio_mlb[29D7]single_brd[21]
C509_RF	CAP_0201-MUR	radio_mlb[29D7]single_brd[21]
C511_RF	CAP_0201-MUR	radio_mlb[29D6]single_brd[21]
C512_RF	CAP_0201-MUR	radio_mlb[29D6]single_brd[21]
C513_RF	CAP_0201-MUR	radio_mlb[29D6]single_brd[21]
C514_RF	CAP_0201-MUR	radio_mlb[29D5]single_brd[21]
C515_RF	CAP_0201-MUR	radio_mlb[29D8]single_brd[21]
C516_RF	CAP_0201-MUR	radio_mlb[29D8]single_brd[21]
C517_RF	CAP_0201-MUR	radio_mlb[29D7]single_brd[21]
C518_RF	CAP_0201-MUR	radio_mlb[29D7]single_brd[21]
C519_RF	CAP_0201-MUR	radio_mlb[29D6]single_brd[21]
C520_RF	CAP_0201-MUR	radio_mlb[29D6]single_brd[21]
C521_RF	CAP_01005	radio_mlb[29B6]single_brd[21]
C522_RF	CAP_0201-MUR	radio_mlb[29C8]single_brd[21]
C523_RF	CAP_0201-MUR	radio_mlb[29A6]single_brd[21]
C524_RF	CAP_0201-MUR	radio_mlb[29A6]single_brd[21]
C525_RF	CAP_0201-MUR	radio_mlb[29B6]single_brd[21]
C526_RF	CAP_0201-MUR	radio_mlb[29A6]single_brd[21]
C527_RF	CAP_0201-MUR	radio_mlb[29D6]single_brd[21]
C528_RF	CAP_0201-MUR	radio_mlb[29D5]single_brd[21]

sydzi.taobao.com

思源电子 sydzi.taobao.com 为您提供维修手机,笔记本,电脑图纸

C601_RF	CAP_01005	radio_mlb[30B7]single_brd[21]
C606_RF	CAP_01005	radio_mlb[30A3]single_brd[21]
C607_RF	CAP_01005	radio_mlb[30A3]single_brd[21]
C608_RF	CAP_01005	radio_mlb[30C6]single_brd[21]
C609_RF	CAP_01005	radio_mlb[30C6]single_brd[21]
C701_RF	CAP_01005	radio_mlb[31D8]single_brd[21]
C702_RF	CAP_01005	radio_mlb[31C4]single_brd[21]
C703_RF	CAP_01005	radio_mlb[31D7]single_brd[21]
C704_RF	CAP_01005	radio_mlb[31D7]single_brd[21]
C705_RF	CAP_01005	radio_mlb[31D8]single_brd[21]
C801_RF	CAP_01005	radio_mlb[32C6]single_brd[21]
C802_RF	CAP_01005	radio_mlb[32C6]single_brd[21]
C803_RF	CAP_01005	radio_mlb[32B5]single_brd[21]
C804_RF	CAP_01005	radio_mlb[32C4]single_brd[21]
C805_RF	CAP_01005	radio_mlb[32B4]single_brd[21]
C806_RF	CAP_01005	radio_mlb[32C3]single_brd[21]
C903_RF	CAP_0201-MUR	radio_mlb[33D7]single_brd[21]
C910_RF	CAP_0201-MUR	radio_mlb[33D4]single_brd[21]
C913_RF	CAP_01005	radio_mlb[33D4]single_brd[21]
C915_RF	CAP_01005	radio_mlb[33D4]single_brd[21]
C916_RF	CAP_0402-1	radio_mlb[33C5]single_brd[21]
C917_RF	CAP_01005	radio_mlb[33C4]single_brd[21]
C918_RF	CAP_0201-MUR	radio_mlb[33C4]single_brd[21]
C919_RF	CAP_01005	radio_mlb[33C4]single_brd[21]
C920_RF	CAP_01005	radio_mlb[33C3]single_brd[21]
C921_RF	CAP_0201	radio_mlb[33C6]single_brd[21]
C922_RF	CAP_0201	radio_mlb[33C6]single_brd[21]
C923_RF	CAP_01005	radio_mlb[33B4]single_brd[21]
C924_RF	CAP_0201-MUR	radio_mlb[33B6]single_brd[21]
C925_RF	CAP_0201	radio_mlb[33B6]single_brd[21]
C927_RF	CAP_0201-MUR	radio_mlb[33B6]single_brd[21]
C929_RF	CAP_01005	radio_mlb[33B4]single_brd[21]
C931_RF	CAP_01005	radio_mlb[33B4]single_brd[21]
C932_RF	CAP_402-LF	radio_mlb[33A4]single_brd[21]
C934_RF	CAP_0402	radio_mlb[33A4]single_brd[21]
C936_RF	CAP_01005	radio_mlb[33B6]single_brd[21]
C937_RF	CAP_01005	radio_mlb[33A6]single_brd[21]
C938_RF	CAP_01005	radio_mlb[33A6]single_brd[21]
C939_RF	CAP_01005	radio_mlb[33A3]single_brd[21]
C940_RF	CAP_0201	radio_mlb[33A4]single_brd[21]
C941_RF	CAP_0402-1	radio_mlb[33B7]single_brd[21]
C942_RF	CAP_01005	radio_mlb[33D3]single_brd[21]
C943_RF	CAP_01005	radio_mlb[33B6]single_brd[21]
C944_RF	CAP_0201	radio_mlb[33D3]single_brd[21]
C1001_RF	CAP_01005	radio_mlb[34D7]single_brd[21]
C1002_RF	CAP_01005	radio_mlb[34D7]single_brd[21]
C1003_RF	CAP_01005	radio_mlb[34D5]single_brd[21]
C1005_RF	CAP_01005	radio_mlb[34C8]single_brd[21]
C1006_RF	CAP_01005	radio_mlb[34C5]single_brd[21]
C1007_RF	CAP_01005	radio_mlb[34C4]single_brd[21]
C1008_RF	CAP_01005	radio_mlb[34C3]single_brd[21]
C1009_RF	CAP_01005	radio_mlb[34C3]single_brd[21]
C1011_RF	CAP_01005	radio_mlb[34C3]single_brd[21]
C1012_RF	IND_0201	radio_mlb[34B6]single_brd[21]
C1013_RF	CAP_0201	radio_mlb[34B2]single_brd[21]
C1014_RF	CAP_01005	radio_mlb[34B2]single_brd[21]
C1016_RF	CAP_01005	radio_mlb[34B2]single_brd[21]
C1018_RF	CAP_01005	radio_mlb[34A4]single_brd[21]
C1019_RF	CAP_01005	radio_mlb[34A4]single_brd[21]
C1020_RF	CAP_01005	radio_mlb[34C4]single_brd[21]
C1021_RF	CAP_01005	radio_mlb[34C5]single_brd[21]
C1022_RF	CAP_0201-MUR	radio_mlb[34C4]single_brd[21]
C1023_RF	RES_201	radio_mlb[34B6]single_brd[21]
C1101_RF	CAP_01005	radio_mlb[35C8]single_brd[21]
C1102_RF	CAP_01005	radio_mlb[35C7]single_brd[21]
C1103_RF	CAP_01005	radio_mlb[35C6]single_brd[21]
C1104_RF	CAP_01005	radio_mlb[35C5]single_brd[21]
C1105_RF	CAP_01005	radio_mlb[35C5]single_brd[21]
C1107_RF	CAP_01005	radio_mlb[35C5]single_brd[21]
C1108_RF	CAP_0201-MUR	radio_mlb[35C4]single_brd[21]
C1109_RF	CAP_01005	radio_mlb[35B6]single_brd[21]
C1110_RF	CAP_01005	radio_mlb[35B6]single_brd[21]
C1111_RF	IND_0201	radio_mlb[35C4]single_brd[21]
C1112_RF	RES_0201	radio_mlb[35C4]single_brd[21]
C1113_RF	IND_0201	radio_mlb[35C1]single_brd[21]
C1114_RF	CAP_01005	radio_mlb[35D2]single_brd[21]
C1115_RF	CAP_01005	radio_mlb[35C2]single_brd[21]
C1116_RF	CAP_01005	radio_mlb[35C2]single_brd[21]
C1117_RF	CAP_201	radio_mlb[35B1]single_brd[21]
C1118_RF	CAP_01005	radio_mlb[35B6]single_brd[21]
C1201_RF	CAP_0402-1	radio_mlb[36D7]single_brd[21]
C1202_RF	CAP_402	radio_mlb[36C6]single_brd[21]
C1203_RF	CAP_01005	radio_mlb[36C5]single_brd[21]
C1204_RF	CAP_01005	radio_mlb[36C4]single_brd[21]
C1205_RF	CAP_0402	radio_mlb[36C5]single_brd[21]
C1206_RF	CAP_01005	radio_mlb[36C4]single_brd[21]
C1207_RF	CAP_01005	radio_mlb[36B5]single_brd[21]
C1208_RF	CAP_01005	radio_mlb[36B5]single_brd[21]
C1209_RF	CAP_01005-1	radio_mlb[36C7]single_brd[21]
C1210_RF	CAP_201	radio_mlb[36B2]single_brd[21]
C1211_RF	CAP_01005	radio_mlb[36B7]single_brd[21]
C1212_RF	CAP_201	radio_mlb[36B2]single_brd[21]
C1214_RF	CAP_01005	radio_mlb[36D8]single_brd[21]
C1215_RF	CAP_0201-MUR	radio_mlb[36D7]single_brd[21]
C1216_RF	CAP_01005	radio_mlb[36C6]single_brd[21]
C1217_RF	CAP_01005	radio_mlb[36B6]single_brd[21]
C1218_RF	CAP_01005	radio_mlb[36C5]single_brd[21]
C1219_RF	CAP_01005	radio_mlb[36D6]single_brd[21]
C1220_RF	CAP_01005	radio_mlb[36D8]single_brd[21]
C1301_RF	CAP_01005	radio_mlb[37C7]single_brd[21]
C1302_RF	CAP_01005	radio_mlb[37B7]single_brd[21]
C1305_RF	CAP_01005	radio_mlb[37C3]single_brd[21]
C1306_RF	CAP_01005	radio_mlb[37C2]single_brd[21]
C1307_RF	CAP_01005	radio_mlb[37B2]single_brd[21]
C1308_RF	CAP_01005	radio_mlb[37B2]single_brd[21]
C1309_RF	CAP_01005	radio_mlb[37B1]single_brd[21]
C1310_RF	CAP_01005	radio_mlb[37B1]single_brd[21]
C1311_RF	CAP_201	radio_mlb[37B1]single_brd[21]
C1312_RF	CAP_01005	radio_mlb[37B2]single_brd[21]
C1401_RF	CAP_01005	radio_mlb[38C8]single_brd[21]
C1402_RF	CAP_01005	radio_mlb[38C7]single_brd[21]
C1403_RF	IND_01005	radio_mlb[38C6]single_brd[21]
C1405_RF	CAP_01005	radio_mlb[38C4]single_brd[21]
C1406_RF	CAP_01005	radio_mlb[38C4]single_brd[21]
C1409_RF	CAP_01005	radio_mlb[38B8]single_brd[21]
C1410_RF	CAP_01005	radio_mlb[38B7]single_brd[21]
C1411_RF	CAP_01005	radio_mlb[38B6]single_brd[21]
C1414_RF	IND_01005	radio_mlb[38B3]single_brd[21]
C1415_RF	CAP_01005	radio_mlb[38B3]single_brd[21]
C1416_RF	IND_0201	radio_mlb[38B4]single_brd[21]
C1417_RF	CAP_01005	radio_mlb[38C5]single_brd[21]
C1420_RF	CAP_01005	radio_mlb[38B2]single_brd[21]
C1421_RF	CAP_01005	radio_mlb[38B2]single_brd[21]
C1423_RF	IND_01005	radio_mlb[38C1]single_brd[21]

C1424_RF	IND_01005	radio_mlb[38C1]single_brd[21]
C1425_RF	IND_0201	radio_mlb[38B5]single_brd[21]
C1501_RF	CAP_01005	radio_mlb[39C8]single_brd[21]
C1502_RF	CAP_01005-1	radio_mlb[39B7]single_brd[21]
C1503_RF	CAP_01005	radio_mlb[39C6]single_brd[21]
C1504_RF	CAP_01005-1	radio_mlb[39C2]single_brd[21]
C1505_RF	CAP_01005	radio_mlb[39C4]single_brd[21]
C1507_RF	CAP_01005	radio_mlb[39C3]single_brd[21]
C1508_RF	CAP_01005-1	radio_mlb[39B3]single_brd[21]
C1509_RF	CAP_01005-1	radio_mlb[39B2]single_brd[21]
C1510_RF	CAP_01005	radio_mlb[39B1]single_brd[21]
C1511_RF	CAP_01005	radio_mlb[39C5]single_brd[21]
C1512_RF	CAP_0201-MUR	radio_mlb[39C5]single_brd[21]
C1513_RF	CAP_01005	radio_mlb[39C5]single_brd[21]
C1601_RF	CAP_01005	radio_mlb[40D5]single_brd[21]
C1602_RF	CAP_01005	radio_mlb[40D5]single_brd[21]
C1603_RF	CAP_01005	radio_mlb[40D6]single_brd[21]
C1604_RF	CAP_01005	radio_mlb[39B5]single_brd[21]
C1605_RF	CAP_01005	radio_mlb[40D5]single_brd[21]
C1606_RF	CAP_0201	radio_mlb[40C6]single_brd[21]
C1607_RF	CAP_01005	radio_mlb[40B6]single_brd[21]
C1608_RF	CAP_01005	radio_mlb[40B6]single_brd[21]
C1609_RF	CAP_01005	radio_mlb[40B4]single_brd[21]
C1610_RF	CAP_01005	radio_mlb[40B3]single_brd[21]
C1611_RF	CAP_01005	radio_mlb[40B4]single_brd[21]
C1612_RF	CAP_01005	radio_mlb[40B3]single_brd[21]
C1613_RF	CAP_01005	radio_mlb[40B6]single_brd[21]
C1614_RF	CAP_01005	radio_mlb[40A6]single_brd[21]
C1615_RF	CAP_01005	radio_mlb[40B4]single_brd[21]
C1616_RF	CAP_01005	radio_mlb[40A4]single_brd[21]
C1701_RF	CAP_01005	radio_mlb[41D6]single_brd[21]
C1702_RF	CAP_0201	radio_mlb[41D7]single_brd[21]
C1703_RF	CAP_01005	radio_mlb[41D5]single_brd[21]
C1704_RF	CAP_01005	radio_mlb[41D5]single_brd[21]
C1707_RF	CAP_01005	radio_mlb[41C6]single_brd[21]
C1712_RF	CAP_201	radio_mlb[41A6]single_brd[21]
C1717_RF	CAP_01005	radio_mlb[41D4]single_brd[21]
C1726_RF	CAP_0201	radio_mlb[41D6]single_brd[21]
C1727_RF	CAP_01005	radio_mlb[41C7]single_brd[21]
C1729_RF	CAP_01005	radio_mlb[41D6]single_brd[21]
C1730_RF	CAP_01005-1	radio_mlb[41D4]single_brd[21]
C1801_RF	CAP_0402-1	radio_mlb[42C6]single_brd[21]
C1802_RF	CAP_01005	radio_mlb[42C6]single_brd[21]
C1803_RF	CAP_01005	radio_mlb[42C5]single_brd[21]
C1804_RF	CAP_01005	radio_mlb[42C5]single_brd[21]
C1805_RF	CAP_201	radio_mlb[42D4]single_brd[21]
C1807_RF	CAP_0201	radio_mlb[42C2]single_brd[21]
C1809_RF	CAP_402	radio_mlb[42B8]single_brd[21]
C1810_RF	CAP_0201	radio_mlb[42A7]single_brd[21]
C1811_RF	CAP_201	radio_mlb[42C3]single_brd[21]
CL1	CLIP_3P_SM	single_brd[21A8]
D1	DIODE_SCHOT_2P_SOD-9	single_brd[13B2]
	23-HF	
D2	DIODE_SCHOT_SOD882	single_brd[13B3]
D3	DIODE_SCHOT_LLP-DFN1	single_brd[8C6]
	006-2	
D5	DIODE_SCHOT_SOD882	single_brd[19D3]
D7	DIODE_SCHOT_SOD523	single_brd[12C6]
DZ1	SUPPR_TRANSIENT_2P1_	single_brd[8B5]
	01005-1	
DZ2	SUPPR_TRANSIENT_2P1_	single_brd[8B6]
	01005-1	
DZ3	SUPPR_TRANSIENT_2P1_	single_brd[8B6]
	01005-1	
DZ4	ZENER_GDZ-0201	single_brd[17D4]
DZ7	SUPPR_TRANSIENT_2P1_	single_brd[8B7]
	01005-1	
DZ9	SUPPR_TRANSIENT_2P1_	single_brd[16C6]
	01005	
DZ10	SUPPR_TRANSIENT_2P1_	single_brd[16C6]
	01005	
DZ11	SUPPR_TRANSIENT_2P1_	single_brd[16C6]
	01005	
DZ12	SUPPR_TRANSIENT_2P1_	single_brd[16C6]
	01005	
DZ13	SUPPR_TRANSIENT_2P1_	single_brd[16A5]
	01005	
DZ14	SUPPR_TRANSIENT_2P1_	single_brd[16A5]
	01005	
DZ15	SUPPR_TRANSIENT_2P1_	single_brd[16B5]
	01005-1	
DZ16	SUPPR_TRANSIENT_2P1_	single_brd[11A5]
	01005-1	
DZ17	SUPPR_TRANSIENT_2P1_	single_brd[11A6]
	01005-1	
DZ18	SUPPR_TRANSIENT_2P1_	single_brd[16D3]
	01005	
DZ19	SUPPR_TRANSIENT_2P1_	single_brd[16D3]
	01005	
DZ101_RF	SUPPR_TPD4E101_SON4	radio_mlb[26A4]single_brd[21]
DZ102_RF	SUPPR_TRANSIENT_2P1_	radio_mlb[26A3]single_brd[21]
	01005-1	
FD1	FIDUCIAL_0P5SM1P0SQ-	single_brd[21B8]
	NSP	
FD2	FIDUCIAL_0P5SM1P0SQ-	single_brd[21B8]
	NSP	
FD4	FIDUCIAL_0P5SM1P0SQ-	single_brd[21B8]
	NSP	
FD5	FIDUCIAL_0P5SM1P0SQ-	single_brd[21B8]
	NSP	
FD6	FIDUCIAL_0P5SM1P0SQ-	single_brd[21B8]
	NSP	
FL1	FILTER_2P_01005	single_brd[19B5]
FL2	FILTER_2P_01005	single_brd[16C7]
FL3	FILTER_2P_01005	single_brd[8B6]
FL4	FILTER_2P_01005	single_brd[11B7]
FL5	FILTER_2P_01005	single_brd[16B7]
FL6	FILTER_2P_0402	single_brd[14C2]
FL7	FILTER_2P_01005	single_brd[8B7]
FL8	FILTER_2P_01005	single_brd[8B6]
FL9	FILTER_2P_0402	single_brd[14C2]
FL10	FILTER_2P_01005	single_brd[21D6]
FL11	FILTER_2P_01005	single_brd[21D6]
FL12	FILTER_2P_01005	single_brd[11D7]
FL13	FILTER_2P_01005	single_brd[11D7]
FL14	FILTER_2P_01005	single_brd[11C7]
FL15	FILTER_2P_01005	single_brd[11D7]
FL16	FILTER_2P_01005	single_brd[16C7]
FL17	FILTER_2P_01005	single_brd[16D7]
FL18	FILTER_2P_01005	single_brd[16C7]
FL19	FILTER_2P_01005	single_brd[16C7]
FL20	FILTER_2P_01005	single_brd[11B7]
FL21	FILTER_2P_01005	single_brd[20A7]
FL22	FILTER_2P_01005	single_brd[20C7]

FL23	FILTER_2P_01005	single_brd[11C2]
FL24	FILTER_2P_0201-1	single_brd[18D2]
FL25	FILTER_2P_0201-1	single_brd[18D2]
FL26	FILTER_2P_0201-1	single_brd[18D2]
FL27	FILTER_2P_0201-1	single_brd[18C2]
FL28	FILTER_2P_01005	single_brd[20D7]
FL29	FILTER_2P_01005	single_brd[20C7]
FL30	FILTER_2P_01005	single_brd[20C7]
FL31	FILTER_2P_01005	single_brd[20C7]
FL32	FILTER_2P_01005	single_brd[10D6]
FL33	FILTER_2P_0201-1	single_brd[19D2]
FL34	FILTER_2P_01005	single_brd[18B2]
FL35	FILTER_2P_01005	single_brd[18C2]
FL36	FILTER_2P_01005	single_brd[18B2]
FL37	FILTER_2P_0201-1	single_brd[18C2]
FL38	FILTER_2P_01005	single_brd[14A5]
FL39	FILTER_2P_01005	single_brd[14B5]
FL40	FILTER_2P_01005	single_brd[14A5]
FL41	FILTER_2P_01005	single_brd[14A5]
FL42	FILTER_2P_01005	single_brd[14A5]
FL43	FILTER_2P_0100S-1	single_brd[20B7]
FL44	FILTER_2P_01005	single_brd[11C2]
FL45	FILTER_2P_01005	single_brd[11C7]
FL46	FILTER_2P_01005	single_brd[8B7]
FL47	FILTER_2P_01005	single_brd[8B3]
FL48	FILTER_2P_01005	single_brd[11A2]
FL49	FILTER_2P_01005	single_brd[16C3]
FL50	FILTER_2P_01005	single_brd[11B7]
FL51	FILTER_2P_01005-1	single_brd[11B7]
FL52	FILTER_2P_01005-1	single_brd[11A7]
FL53	FILTER_2P_01005-1	single_brd[16A3]
FL54	FILTER_2P_01005	single_brd[16C7]
FL55	FILTER_2P_01005	single_brd[14A5]
FL56	FILTER_2P_01005	single_brd[14A5]
FL57	FILTER_2P_01005	single_brd[11B7]
FL58	FILTER_2P_01005	single_brd[11C7]
FL59	FILTER_2P_0201	single_brd[4B3]
FL60	FILTER_2P_0100S-1	single_brd[16A3]
FL61	FILTER_2P_01005	single_brd[18D2]
FL62	FILTER_2P_01005	single_brd[18B2]
FL1001_RF	FIL_SAFFBB836MAL0FS7_	radio_mlb[34C7]single_brd[21]
	LGA	
FL1002_RF	FILTER_SAW_1IN4OUT_L	radio_mlb[34D6]single_brd[21]
	LP	
FL1101_RF	FILTER_SAW_1IN4OUT_L	radio_mlb[35C7]single_brd[21]
	LP	
FL1301_RF	FILTER_SAFFB1G84FB0F	radio_mlb[37C6]single_brd[21]
	57_LLP	
FL1302_RF	FILTER_3P4_LFL18766M	radio_mlb[37B5]single_brd[21]
	TN1D393	
FL1401_RF	FIL_SAFFB1G95KA0FS7_	radio_mlb[38C7]single_brd[21]
	LGA	
FL1402_RF	FIL_SAFFB1G73KA0FS7_	radio_mlb[38B7]single_brd[21]
	LLP	
FL1501_RF	FILTER_SAW_1IN4OUT_L	radio_mlb[39C6]single_brd[21]
	LP	
FL1701_RF	FILTER_3P5_LFE18832M	radio_mlb[41D7]single_brd[21]
	HC1D449	
FL1702_RF	FILTER_SAW_1IN2OUT_L	radio_mlb[41C5]single_brd[21]
	LP	
J1	CON_M34ST_D4MT_SM1_M	single_brd[11C5]
	-ST-SM	
J2	CON_M10ST_D2MT_SM_M-	single_brd[8B5]
	ST-SM	
J3	CON_M32ST_D4MT_SM_M-	single_brd[20C4]
	ST-SM	
J4	CON_M42ST_D4MT_SM_M-	single_brd[18B7]
	ST-SM	
J5	CON_M28ST_D4MT_SM_M-	single_brd[18C4]
	ST-SM	
J6	CON_F8ST_D6MT_SM_F-S	single_brd[21D7]
	T-SM	
J7	CON_M30ST_D4MT_SM_M-	single_brd[16C4]
	ST-SM	
J10_RF	CON_M54ST_D4MT_SM_M-	radio_mlb[26D2]single_brd[21]
	ST-SM	
J101_RF	CON_F6ST_6MT_SIMCARD	radio_mlb[26A6]single_brd[21]
	_SM3_F-ST-SM	
J202_RF	CON_F1ST_COAX_S3MT_S	radio_mlb[26B4]single_brd[21]
	M_F-ST-SM	
J203_RF	CON_F1ST_COAX_S3MT_S	radio_mlb[26B4]single_brd[21]
	M_F-ST-SM	
J1701_RF	CON_F1ST_COAX_S3MT_S	radio_mlb[41D3]single_brd[21]
	M_F-ST-SM	
J1702_RF	CON_F1ST_COAX_S3MT_S	radio_mlb[41C3]single_brd[21]
	M_F-ST-SM	
J1703_RF	CON_8HB_S_HB-SM	radio_mlb[41C8]single_brd[21]
J1704_RF	CON_F1ST_COAX_S3MT_S	radio_mlb[41B8]single_brd[21]
	M_F-ST-SM	
J1705_RF	CON_F2ST_COAX_3MT_SM	radio_mlb[41B5]single_brd[21]
	_F-RT-SM	
J1706_RF	CON_F1ST_COAX_S3MT_S	radio_mlb[41C7]single_brd[21]
	M_F-ST-SM	
J1707_RF	CON_F1ST_COAX_S3MT_S	radio_mlb[41C6]single_brd[21]
	M_F-ST-SM	
J1708_RF	CON_F2ST_COAX_3MT_SM	radio_mlb[41D2]single_brd[21]
	_F-RT-SM	
J1801_RF	CON_F1ST_COAX_S3MT_S	radio_mlb[42D6]single_brd[21]
	M_F-ST-SM	
L1	IND_01005	single_brd[2B3]
L2	IND_P_VLS252010MNT-S	single_brd[12C7]
	M	
L3	IND_P_VLF302510T-SM	single_brd[13B3]
L4	IND_TFA302610A-SM	single_brd[14D6]
L5	IND_P_TFA201610G-SM	single_brd[19D7]
L6	IND_0201	single_brd[16D2]
L7	IND_0201	single_brd[16D2]
L8	IND_01005	single_brd[2B3]
L10	IND_P_VLS252010MNT-S	single_brd[12C5]
	M	
L11	IND_P_VLS252010MNT-S	single_brd[12C4]
	M	
L11_RF	IND_0603	radio_mlb[42B7]single_brd[21]
L12	IND_P_VLS252010MNT-S	single_brd[12C4]
	M	
L13	IND_P_VLS252010MNT-S	single_brd[12C3]
	M	
L14	IND_P_VLS252010MNT-S	single_brd[12D3]
	M	
L15	IND_P_PSB251T-SM	single_brd[12C3]
L16	IND_P_VLS201610MT-SM	single_brd[12D2]
L17	IND_P_VLS2010MT-SM	single_brd[12B2]
L18	IND_P_VLS2010MT-SM	single_brd[12B2]
L19	IND_P_VLS201610MNT-S	single_brd[13C3]

	M1	
L20	FILTER_4P_TCM0605-1	single_brd[16B2]
L21	IND_PSB12101T-SM	single_brd[17B3]
L22	FILTER_4P_TCM0605-1	single_brd[16B2]
L28	IND_0201	single_brd[20C7]
L29	IND_0201	single_brd[20A7]
L30	IND_0201	single_brd[20B7]
L33	FILTER_4P_TCM0605-1	single_brd[20C3]
L34	FILTER_4P_TCM0605-1	single_brd[20C2]
L35	FILTER_4P_TCM0605-1	single_brd[11D2]
L36	FILTER_4P_TCM0605-1	single_brd[20B2]
L37	FILTER_4P_TCM0605-1	single_brd[20B2]
L38	FILTER_4P_TCM0605-1	single_brd[20B3]
L39	FILTER_4P_TCM0605-1	single_brd[11C2]
L40	IND_P_VLS201610MT-6R	single_brd[19C3]
	8M-SM	
L41	FILTER_4P_TCM0605-1	single_brd[18C6]
L42	FILTER_4P_TCM0605-1	single_brd[18C6]
L43	FILTER_4P_TCM0605-1	single_brd[18B6]
L44	FILTER_4P_TCM0605-1	single_brd[18C6]
L45	FILTER_4P_TCM0605-1	single_brd[18B6]
L50	IND_P_VLS252010MNT-S	single_brd[12C4]
	M	
L54	IND_P_VLS252010MNT-S	single_brd[12D2]
	M	
L207_RF	IND_0806	radio_mlb[27D3]single_brd[21]
L208_RF	IND_0806	radio_mlb[27C3]single_brd[21]
L209_RF	IND_0806	radio_mlb[27C3]single_brd[21]
L210_RF	IND_0806	radio_mlb[27B3]single_brd[21]
L211_RF	IND_TPA252010-SM	radio_mlb[27B3]single_brd[21]
L701_RF	FILTER_2P_01005	radio_mlb[31C3]single_brd[21]
L802_RF	IND_01005	radio_mlb[32C3]single_brd[21]
L803_RF	IND_01005	radio_mlb[32B3]single_brd[21]
L804_RF	IND_01005	radio_mlb[32C3]single_brd[21]
L805_RF	IND_01005	radio_mlb[32C3]single_brd[21]
L901_RF	IND_0201	radio_mlb[33D7]single_brd[21]
L903_RF	IND_0201	radio_mlb[33D5]single_brd[21]
L904_RF	IND_0201	radio_mlb[33C5]single_brd[21]
L906_RF	FILTER_2P_01005-1	radio_mlb[33C5]single_brd[21]
L908_RF	FILTER_2P_01005-1	radio_mlb[33B5]single_brd[21]
L909_RF	FILTER_2P_01005-1	radio_mlb[33B5]single_brd[21]
L910_RF	FILTER_2P_01005-1	radio_mlb[33B5]single_brd[21]
L911_RF	FILTER_2P_01005-1	radio_mlb[33A5]single_brd[21]
L913_RF	FILTER_2P_01005-1	radio_mlb[33A3]single_brd[21]
L914_RF	FILTER_2P_01005	radio_mlb[33A5]single_brd[21]
L915_RF	IND_0201	radio_mlb[33C4]single_brd[21]
L916_RF	IND_0201	radio_mlb[33C4]single_brd[21]
L917_RF	IND_0201	radio_mlb[33A7]single_brd[21]
L918_RF	FILTER_2P_0201	radio_mlb[33C7]single_brd[21]
L919_RF	FILTER_2P_0201	radio_mlb[33C6]single_brd[21]
L920_RF	IND_0201	radio_mlb[33B6]single_brd[21]
L921_RF	IND_0201	radio_mlb[33B7]single_brd[21]
L922_RF	IND_0201	radio_mlb[33A7]single_brd[21]
L923_RF	IND_0201	radio_mlb[33D4]single_brd[21]
L924_RF	IND_0201	radio_mlb[33D4]single_brd[21]
L925_RF	FILTER_2P_01005-1	radio_mlb[33B6]single_brd[21]
L926_RF	IND_0402	radio_mlb[33B7]single_brd[21]
L1001_RF	IND_01005	radio_mlb[34D8]single_brd[21]
L1002_RF	IND_01005	radio_mlb[34D5]single_brd[21]
L1003_RF	IND_01005	radio_mlb[34C6]single_brd[21]
L1004_RF	CAP_0201	radio_mlb[34B7]single_brd[21]
L1005_RF	IND_0201	radio_mlb[34B2]single_brd[21]
L1006_RF	CAP_01005	radio_mlb[34C8]single_brd[21]
L1007_RF	IND_P_01005	radio_mlb[34B3]single_brd[21]
L1009_RF	IND_01005	radio_mlb[34A5]single_brd[21]
L1010_RF	IND_01005	radio_mlb[34C7]single_brd[21]
L1102_RF	IND_01005	radio_mlb[35C6]single_brd[21]
L1103_RF	CAP_201	radio_mlb[35B4]single_brd[21]
L1104_RF	IND_0201	radio_mlb[35B2]single_brd[21]
L1105_RF	RES_201	radio_mlb[35C2]single_brd[21]
L1106_RF	IND_01005	radio_mlb[35D1]single_brd[21]
L1107_RF	IND_01005	radio_mlb[35C2]single_brd[21]
L1108_RF	IND_01005	radio_mlb[35C1]single_brd[21]
L1201_RF	IND_P_TPA201610G-SM	radio_mlb[36D6]single_brd[21]
L1202_RF	FILTER_2P_01005	radio_mlb[36C5]single_brd[21]
L1203_RF	IND_01005	radio_mlb[36C7]single_brd[21]
L1204_RF	IND_0201	radio_mlb[36B3]single_brd[21]
L1205_RF	IND_01005	radio_mlb[36B7]single_brd[21]
L1206_RF	IND_0201	radio_mlb[36B3]single_brd[21]
L1207_RF	IND_0201	radio_mlb[36B3]single_brd[21]
L1301_RF	IND_01005	radio_mlb[37C7]single_brd[21]
L1302_RF	IND_01005	radio_mlb[37C6]single_brd[21]
L1303_RF	IND_0201	radio_mlb[37B2]single_brd[21]
L1304_RF	IND_01005	radio_mlb[37C7]single_brd[21]
L1305_RF	IND_01005	radio_mlb[37B7]single_brd[21]
L1401_RF	IND_01005	radio_mlb[38C8]single_brd[21]
L1402_RF	IND_01005	radio_mlb[38C6]single_brd[21]
L1403_RF	IND_01005	radio_mlb[38C3]single_brd[21]
L1405_RF	IND_01005	radio_mlb[38C2]single_brd[21]
L1407_RF	IND_01005	radio_mlb[38B8]single_brd[21]
L1408_RF	IND_01005	radio_mlb[38B6]single_brd[21]
L1409_RF	CAP_0201	radio_mlb[38B5]single_brd[21]
L1412_RF	CAP_01005	radio_mlb[38C2]single_brd[21]
L1413_RF	IND_01005	radio_mlb[38B2]single_brd[21]
L1414_RF	CAP_01005	radio_mlb[38C2]single_brd[21]
L1415_RF	CAP_0201	radio_mlb[38A4]single_brd[21]
L1416_RF	IND_01005	radio_mlb[38B2]single_brd[21]
L1417_RF	CAP_01005	radio_mlb[38B6]single_brd[21]
L1418_RF	CAP_01005	radio_mlb[38C6]single_brd[21]
L1419_RF	IND_0201	radio_mlb[38B4]single_brd[21]
L1420_RF	CAP_01005	radio_mlb[38B1]single_brd[21]
L1421_RF	CAP_01005	radio_mlb[38B1]single_brd[21]
L1501_RF	IND_01005	radio_mlb[39C7]single_brd[21]
L1502_RF	IND_01005	radio_mlb[39C5]single_brd[21]
L1503_RF	IND_01005	radio_mlb[39C3]single_brd[21]
L1505_RF	IND_01005	radio_mlb[39C2]single_brd[21]
L1506_RF	IND_01005	radio_mlb[39B2]single_brd[21]
L1507_RF	IND_01005	radio_mlb[39B2]single_brd[21]
L1508_RF	IND_01005	radio_mlb[39C5]single_brd[21]
L1509_RF	IND_01005	radio_mlb[39C2]single_brd[21]
L1601_RF	IND_0201	radio_mlb[40C6]single_brd[21]
L1602_RF	IND_01005	radio_mlb[40B7]single_brd[21]
L1603_RF	IND_01005	radio_mlb[40B6]single_brd[21]
L1604_RF	IND_01005	radio_mlb[40B3]single_brd[21]
L1605_RF	IND_01005	radio_mlb[40B2]single_brd[21]
L1606_RF	IND_01005	radio_mlb[40B6]single_brd[21]
L1607_RF	IND_01005	radio_mlb[40B6]single_brd[21]
L1608_RF	IND_01005	radio_mlb[40B3]single_brd[21]
L1609_RF	IND_01005	radio_mlb[40A3]single_brd[21]
L1610_RF	IND_01005	radio_mlb[40A3]single_brd[21]
L1706_RF	IND_01005	radio_mlb[41C4]single_brd[21]
L1707_RF	IND_01005	radio_mlb[41C4]single_brd[21]
L1709_RF	IND_01005	radio_mlb[41B4]single_brd[21]
L1710_RF	RES_201	radio_mlb[41A7]single_brd[21]

思源电子 sydzi.taobao.com 为您提供维修手机.笔记本.电脑图纸

L1713_RF	IND_01005	radio_mlb[41C4]single_brd[21]
L1715_RF	IND_03015	radio_mlb[41D3]single_brd[21]
L1716_RF	IND_01005	radio_mlb[41B6]single_brd[21]
L1724_RF	IND_03015	radio_mlb[41D8]single_brd[21]
L1726_RF	FILTER_2P_01005	radio_mlb[41C7]single_brd[21]
L1732_RF	IND_03015	radio_mlb[41D6]single_brd[21]
L1812_RF	IND_0201	radio_mlb[42D5]single_brd[21]
PP1	PROBEPOINT_SM	single_brd[2B6]
PP2	PROBEPOINT_SM	single_brd[6B7]
PP3	PROBEPOINT_SM	single_brd[6B7]
PP4	PROBEPOINT_SM	single_brd[2B6]
PP5	PROBEPOINT_SM	single_brd[6B4]
PP6	PROBEPOINT_SM	single_brd[6B4]
PP7	PROBEPOINT_SM	single_brd[17C7]
PP8	PROBEPOINT_SM	single_brd[17C7]
PP9	PROBEPOINT_SM	single_brd[17A6]
PP10	PROBEPOINT_SM	single_brd[6B7]
PP11	PROBEPOINT_SM	single_brd[17B7]
PP14	PROBEPOINT_SM	single_brd[3D2]
PP16	PROBEPOINT_SM	single_brd[3D2]
PP18	PROBEPOINT_SM	single_brd[17B1]
PP101_RF	PROBEPOINT_SM	radio_mlb[26C6]single_brd[21]
PP102_RF	PROBEPOINT_SM	radio_mlb[42A4]single_brd[21]
PP103_RF	PROBEPOINT_SM	radio_mlb[26B6]single_brd[21]
PP104_RF	PROBEPOINT_SM	radio_mlb[26B6]single_brd[21]
PP105_RF	PROBEPOINT_SM	radio_mlb[26B6]single_brd[21]
PP106_RF	PROBEPOINT_SM	radio_mlb[26C6]single_brd[21]
PP107_RF	PROBEPOINT_SM	radio_mlb[26C6]single_brd[21]
PP113_RF	PROBEPOINT_SM	radio_mlb[26B5]single_brd[21]
PP114_RF	PROBEPOINT_SM	radio_mlb[26B5]single_brd[21]
PP301_RF	PROBEPOINT_SM	radio_mlb[28B3]single_brd[21]
PP302_RF	PROBEPOINT_SM	radio_mlb[28B3]single_brd[21]
PP1801_RF	PROBEPOINT_SM	radio_mlb[42B4]single_brd[21]
PP1802_RF	PROBEPOINT_SM	radio_mlb[42A3]single_brd[21]
PP1803_RF	PROBEPOINT_SM	radio_mlb[42A3]single_brd[21]
PP1804_RF	PROBEPOINT_SM	radio_mlb[42A3]single_brd[21]
PP1805_RF	PROBEPOINT_SM	radio_mlb[42A3]single_brd[21]
PP1806_RF	PROBEPOINT_SM	radio_mlb[42A3]single_brd[21]
PP1807_RF	PROBEPOINT_SM	radio_mlb[42A3]single_brd[21]
Q1	TRA_MOSFET_NCHN_3P3_DFN1006H4-3	single_brd[11B3]
Q2	TRA_DUAL_CMNSRC_PCH_9P_CSP	single_brd[16B7 16B6]
Q3	TRA_MOSFET_PCHN_3P9_DFN	single_brd[19B4]
Q4	TRA_MOSFET_PCHN_9P_BGA	single_brd[12C8]
Q5	TRA_MOSFET_NCHN_6P3_BGA	single_brd[12D5]
Q6	TRA_MOSFET_NCHN_6P3_BGA	single_brd[12D2]
Q7	TRA_MOSFET_NCHN_3P11_SM	single_brd[19B3]
Q8	TRA_MOSFET_NCHN_3P3_DFN1006H4-3	single_brd[8C6]
Q9	TRA_MOSFET_NCHN_4P5_WLP	single_brd[17A6]
Q10	TRA_MOSFET_NCHN_3P11_SM	single_brd[19B7]
R1	RES_01005	single_brd[2D7]
R2	RES_01005	single_brd[17B1]
R3	RES_01005	single_brd[11A7]
R4	RES_01005	single_brd[13D5]
R5	RES_01005	single_brd[3D5]
R6	RES_01005	single_brd[2B3]
R7	RES_01005	single_brd[2C3]
R8	RES_01005	single_brd[6B2]
R9	RES_01005	single_brd[13A7]
R10	RES_01005	single_brd[16D2]
R11	RES_01005	single_brd[10D2]
R12	RES_01005	single_brd[3C7]
R13	RES_01005	single_brd[8C7]
R14	RES_01005	single_brd[11B2]
R15	RES_01005	single_brd[11B2]
R16	RES_01005	single_brd[3D5]
R17	RES_01005	single_brd[3D3]
R18	RES_01005	single_brd[3D3]
R19	RES_01005	single_brd[3D3]
R20	RES_01005	single_brd[3A4]
R21	RES_01005	single_brd[3D2]
R22	RES_01005	single_brd[3A4]
R23	RES_01005	single_brd[16D2]
R24	RES_01005	single_brd[13A6]
R25	RES_01005	single_brd[13D5]
R26	RES_01005	single_brd[17C7]
R27	RES_01005	single_brd[4A8]
R28	RES_01005	single_brd[4A8]
R29	RES_01005	single_brd[4A6]
R30	RES_01005	single_brd[4A6]
R31	RES_01005	single_brd[4A5]
R32	RES_01005	single_brd[4A5]
R33	RES_01005	single_brd[4A4]
R34	RES_01005	single_brd[4A4]
R35	RES_201	single_brd[14C4]
R36	RES_01005	single_brd[17A2]
R37	RES_01005	single_brd[7D2]
R38	RES_01005	single_brd[7C2]
R39	RES_01005	single_brd[7D2]
R40	RES_01005	single_brd[7C2]
R41	RES_01005	single_brd[7D2]
R42	RES_01005	single_brd[7D2]
R43	RES_201	single_brd[15C7]
R44	RES_201	single_brd[15C7]
R45	RES_201	single_brd[11C3]
R46	RES_01005	single_brd[18B2]
R47	RES_01005	single_brd[18A5]
R48	RES_01005	single_brd[18A5]
R49	RES_01005	single_brd[18A5]
R50	RES_01005	single_brd[8B3]
R51	RES_01005	single_brd[8B3]
R52	RES_01005	single_brd[3B8]
R53	RES_01005	single_brd[19A3]
R54	RES_01005	single_brd[19A4]
R55	RES_01005	single_brd[19A5]
R56	RES_01005	single_brd[19B2]
R57	THERMISTER_0201	single_brd[12A5]
R58	RES_201	single_brd[16B6]
R59	RES_201	single_brd[16B6]
R60	RES_01005	single_brd[18B2]
R61	RES_01005	single_brd[18A5]
R62	RES_01005	single_brd[18A5]
R63	RES_01005	single_brd[19C7]
R64	RES_01005	single_brd[14D4]
R65	RES_01005	single_brd[13C2]
R66	RES_01005	single_brd[14C4]
R67	RES_01005	single_brd[2B6]
R68	RES_01005	single_brd[5D7]
R69	RES_01005	single_brd[14D2]
R70	RES_01005	single_brd[12C7]
R71	RES_01005	single_brd[2B3]
R72	RES_01005	single_brd[4D7]
R73	RES_01005	single_brd[4D7]
R74	RES_01005	single_brd[6C2]
R75	RES_01005	single_brd[14D2]
R76	RES_01005	single_brd[3C7]
R77	RES_01005	single_brd[5C7]
R78	RES_01005	single_brd[6C7]
R79	RES_01005	single_brd[17B5]
R80	RES_01005	single_brd[17A6]
R81	RES_01005	single_brd[8C7]
R82	RES_01005	single_brd[6C6]
R83	RES_01005	single_brd[15C7]
R84	RES_01005	single_brd[15B7]
R85	RES_01005	single_brd[11B3]
R86	RES_01005	single_brd[17C5]
R87	RES_01005	single_brd[13C2]
R88	RES_01005	single_brd[15B3]
R89	RES_01005	single_brd[18C6]
R90	THERMISTER_0201	single_brd[12A4]
R91	RES_01005	single_brd[19A5]
R92	RES_01005	single_brd[12B3]
R93	RES_01005	single_brd[3D2]
R94	RES_01005	single_brd[22B4]
R95	RES_01005	single_brd[17A7]
R96	RES_01005	single_brd[14C6]
R100	RES_01005	single_brd[10B6]
R101	RES_01005	single_brd[10B4]
R102	RES_01005	single_brd[10C2]
R103	RES_01005	single_brd[10C2]
R104	RES_01005	single_brd[10A4]
R104_RF	RES_01005	radio_mlb[26A5]single_brd[21]
R105_RF	RES_01005	radio_mlb[26A5]single_brd[21]
R107	RES_01005	single_brd[16D7]
R108	THERMISTER_0201	single_brd[12A8]
R109	RES_0201	single_brd[12B8]
R110	THERMISTER_0201	single_brd[12A7]
R111	RES_01005	single_brd[15C3]
R112	RES_01005	single_brd[13B6]
R113	RES_01005	single_brd[13B6]
R114	RES_01005	single_brd[13B6]
R115	RES_01005	single_brd[3D2]
R116	RES_201	single_brd[13D4]
R117	RES_01005	single_brd[8C7]
R118	RES_01005	single_brd[8C6]
R119	RES_01005	single_brd[16B3]
R120	RES_01005	single_brd[17D1]
R123	RES_201	single_brd[14C3]
R124	RES_01005	single_brd[19A7]
R125	RES_01005	single_brd[11C7]
R126	RES_01005	single_brd[10D3]
R127	RES_01005	single_brd[16C2]
R128	RES_01005	single_brd[16C2]
R134	RES_01005	single_brd[16B7]
R136	RES_01005	single_brd[17B7]
R137	RES_01005	single_brd[6C5]
R141	RES_01005	single_brd[20C5]
R143	RES_01005	single_brd[6C5]
R145	RES_01005	single_brd[9B3]
R150	RES_01005	single_brd[10A7]
R151	RES_01005	single_brd[10B7]
R152	RES_01005	single_brd[18B3]
R301_RF	RES_01005	radio_mlb[28B4]single_brd[21]
R302_RF	RES_01005	radio_mlb[28D3]single_brd[21]
R303_RF	RES_01005	radio_mlb[28D4]single_brd[21]
R304_RF	RES_01005	radio_mlb[28D3]single_brd[21]
R307_RF	RES_01005	radio_mlb[28B4]single_brd[21]
R310_RF	RES_01005	radio_mlb[28B2]single_brd[21]
R317_RF	RES_01005	radio_mlb[28C7]single_brd[21]
R318_RF	RES_01005	radio_mlb[28C8]single_brd[21]
R319_RF	RES_01005	radio_mlb[28C8]single_brd[21]
R320_RF	RES_01005	radio_mlb[28B4]single_brd[21]
R501_RF	RES_01005	radio_mlb[29A5]single_brd[21]
R502_RF	RES_01005	radio_mlb[29B2]single_brd[21]
R503_RF	RES_01005	radio_mlb[29A4]single_brd[21]
R504_RF	RES_01005	radio_mlb[29B4]single_brd[21]
R505_RF	RES_01005	radio_mlb[29B6]single_brd[21]
R601_RF	RES_01005	radio_mlb[30C4]single_brd[21]
R604_RF	RES_01005	radio_mlb[30A4]single_brd[21]
R605_RF	RES_01005	radio_mlb[30A3]single_brd[21]
R608_RF	RES_01005	radio_mlb[29D1]single_brd[21]
R701_RF	RES_01005	radio_mlb[31D7]single_brd[21]
R703_RF	RES_01005	radio_mlb[31C8]single_brd[21]
R704_RF	RES_01005	radio_mlb[31D8]single_brd[21]
R705_RF	RES_01005	radio_mlb[31C7]single_brd[21]
R1002_RF	RES_201	radio_mlb[34B2]single_brd[21]
R1101_RF	RES_01005	radio_mlb[35C7]single_brd[21]
R1102_RF	RES_01005	radio_mlb[35C8]single_brd[21]
R1204_RF	IND_0201	radio_mlb[36B3]single_brd[21]
R1301_RF	RES_01005	radio_mlb[37B5]single_brd[21]
R1302_RF	RES_01005	radio_mlb[37C5]single_brd[21]
R1303_RF	RES_01005	radio_mlb[37B5]single_brd[21]
R1304_RF	RES_201	radio_mlb[37B2]single_brd[21]
R1305_RF	RES_01005	radio_mlb[37B5]single_brd[21]
R1306_RF	RES_01005	radio_mlb[37B3]single_brd[21]
R1307_RF	RES_01005	radio_mlb[37B6]single_brd[21]
R1401_RF	RES_01005	radio_mlb[38C3]single_brd[21]
R1402_RF	IND_0201	radio_mlb[38B5]single_brd[21]
R1404_RF	RES_01005	radio_mlb[38B3]single_brd[21]
R1406_RF	RES_01005	radio_mlb[38B3]single_brd[21]
R1601_RF	RES_0201	radio_mlb[40C6]single_brd[21]
R1603_RF	RES_201	radio_mlb[40C4]single_brd[21]
R1802_RF	RES_201	radio_mlb[42D4]single_brd[21]
R1805_RF	RES_01005	radio_mlb[42C7]single_brd[21]
R1807_RF	RES_01005	radio_mlb[42C6]single_brd[21]
R1808_RF	RES_01005	radio_mlb[42C4]single_brd[21]
R1809_RF	RES_01005	radio_mlb[42B7]single_brd[21]
R1811_RF	RES_01005	radio_mlb[42B4]single_brd[21]
R1812_RF	RES_01005	radio_mlb[42A7]single_brd[21]
R1813_RF	RES_01005	radio_mlb[42A7]single_brd[21]
R1814_RF	RES_01005	radio_mlb[42A5]single_brd[21]
R1815_RF	RES_201	radio_mlb[42C2]single_brd[21]
SH1	SHLD_1P_SM	single_brd[21C6]
SH2	SHLD_1P_SM	single_brd[21B6]
SH3	SHLD_1P_SM	single_brd[21B6]
SH4	SHLD_1P_SM	single_brd[21B6]
TP1	TP_TP-P6	single_brd[22D7]
TP2	TP_TP-P6	single_brd[22D7]
TP3	TP_TP-P6	single_brd[22D7]
TP4	TP_TP-P6	single_brd[22D7]
TP5	TP_TP-P6	single_brd[22C7]
TP6	TP_TP-P6	single_brd[22C7]
TP7	TP_TP-P6	single_brd[22C7]
TP8	TP_TP-P6	single_brd[22B7]
TP9	TP_TP-P6	single_brd[22B7]
TP10	TP_TP-P6	single_brd[22B4]
TP15	TP_TP-P6	single_brd[22C6]
TP16	TP_TP-P6	single_brd[22C6]
TP17	TP_TP-P6	single_brd[22C6]
TP18	TP_TP-P6	single_brd[22D4]
TP19	TP_TP-P6	single_brd[22D4]
TP20	TP_TP-P6	single_brd[22D4]
TP21	TP_TP-P55	single_brd[22C4]
TP22	TP_TP-P55	single_brd[22C4]
TP23	TP_TP-P55	single_brd[22C4]
TP24	TP_TP-P55	single_brd[22C4]
TP25	TP_TP-P6	single_brd[22B4]
TP26	TP_TP-P6	single_brd[22B4]
TP27	TP_TP-P6	single_brd[22B4]
TP28	TP_TP-P6	single_brd[22A6]
TP29	TP_TP-P6	single_brd[22A6]
TP32	TP_TP-P6	single_brd[22B4]
U1	H5P_FCMSP	single_brd[2C5]
U1	H5P_FCMSP	single_brd[3D4 3B7]
U1	H5P_FCMSP	single_brd[4D2 4D6]
U1	H5P_FCMSP	single_brd[5D2 5D5]
U1	H5P_FCMSP	single_brd[6C7]
U1	H5P_FCMSP	single_brd[7B4 7D7 7D8 7D4]
U2	CBTL1608A1_WCSP	single_brd[15C5]
U3	74AUP2G34_SOT1115	single_brd[3A3]
U4	FLASH_XGX8_60LGA_LGA-12X17	single_brd[6C4]
U5	74AUP3G04_SOT1089	single_brd[17B2]
U6	74LVC1G32GF_SOT891	single_brd[13A6]
U7	AGATHA_II_BGA	single_brd[12D6]
U7	AGATHA_II_BGA	single_brd[13D8 13C5]
U8	AP3GDL20_LGA	single_brd[14B2]
U9	LREG_LP5907_USMD	single_brd[8C7]
U10	LREG_TPS799_WCSP	single_brd[13B2]
U11	74LVC2G07_SOT891	single_brd[13D6]
U12	CUMULUS_BGA63_WLBGA	single_brd[17C6]
U13	LREG_LP5908_USMD	single_brd[20B6]
U14	SAGE2_1_CSP	single_brd[17D3]
U15	DCDC_LM34908_USMD	single_brd[19D4]
U16	AK8963C_CSP	single_brd[14A8]
U17	LM3563_BGA	single_brd[19D6]
U18	AP3DSHAD_LGA	single_brd[14B7]
U19	CS35L19B_WLCSP	single_brd[14D5]
U20	LREG_LP5907_USMD	single_brd[10D2]
U21	CS42L65B_FCBGA	single_brd[9C2 9C5]
U21	CS42L65B_FCBGA	single_brd[10C5]
U22	TPS22924_CSP	single_brd[12B2]
U23	LM3534_BGA	single_brd[13B3]
U201_RF	PM8018_WLNSP105_BGA	radio_mlb[27C6]single_brd[21]
U201_RF	PM8018_WLNSP105_BGA	radio_mlb[28D3 28B7 28B4 28C7]single_brd[21]
U501_RF	MODEM_MDM9615_BGA	radio_mlb[29D2 29B4 29D4 29C7]single_brd[21]
U501_RF	MODEM_MDM9615_BGA	radio_mlb[30D7 30C3]single_brd[21]
U601_RF	FLASH_MX25U1635E_WLCSP	radio_mlb[30B7]single_brd[21]
U701_RF	TRANSCEIVER_BGA196_BGA196	radio_mlb[31D3 31D6]single_brd[21]
U701_RF	TRANSCEIVER_BGA196_BGA196	radio_mlb[33D2 33B2]single_brd[21]
U801_RF	SWI_XM0830SZ_LLP	radio_mlb[32C5]single_brd[21]
U1001_RF	AMP_SKY77487_LGA	radio_mlb[34C5]single_brd[21]
U1101_RF	AMP_ACPM5617_LGA	radio_mlb[35C5]single_brd[21]
U1102_RF	FILTER_SAW_SAYEY710M_CA0F57_LLP	radio_mlb[35C2]single_brd[21]
U1201_RF	MAX77100_WLP	radio_mlb[36D7]single_brd[21]
U1202_RF	SKY77352_LGA	radio_mlb[36C4]single_brd[21]
U1301_RF	LMSP3NQPD06_LGA	radio_mlb[37C3]single_brd[21]
U1401_RF	AMP_SKY77486_LGA	radio_mlb[38C5]single_brd[21]
U1501_RF	AMP_TQM666084_LGA	radio_mlb[39C5]single_brd[21]
U1601_RF	SWI_HFQSWEFUA127_LGA	radio_mlb[40D5]single_brd[21]
U1701_RF	RF1102_12_WLCSP14	radio_mlb[41D5]single_brd[21]
U1801_RF	LBEE5ZHTWC501_LGA	radio_mlb[42C6]single_brd[21]
U1802_RF	74AUP1G08_SOT891	radio_mlb[42A7]single_brd[21]
U1804_RF	FIL_DIPLEXER_HILOCOM_6P_SM	radio_mlb[42D2]single_brd[21]
XW1	SHORT_SM	single_brd[10B3]
XW2	SHORT_SM	single_brd[6D2]
XW3	SHORT10LP1_WITH_ALTS_SHORT-10L-0.1MM-SM	single_brd[5D7]
XW4	SHORT10LP1_WITH_ALTS_SHORT-10L-0.1MM-SM	single_brd[10B6]
XW5	SHORT_SM	single_brd[8B3]
XW6	SHORT10LP1_WITH_ALTS_SHORT-10L-0.1MM-SM	single_brd[10A6]
XW7	SHORT_SM	single_brd[11B3]
XW8	SHORT10LP1_WITH_ALTS_SHORT-10L-0.1MM-SM	single_brd[5C7]
XW9	SHORT10LP1_WITH_ALTS_SHORT-10L-0.1MM-SM	single_brd[12A7]
XW10	SHORT_SM	single_brd[12A3]
XW11	SHORT10LP1_WITH_ALTS_SHORT-10L-0.1MM-SM	single_brd[12A6]
XW12	SHORT10LP25_WITH_ALTS_SHORT-10L-0.25MM-SM	single_brd[21C6]
XW13	SHORT_SM	single_brd[16B2]
XW14	SHORT10LP1_WITH_ALTS_SHORT-10L-0.1MM-SM	single_brd[12D4]
XW15	SHORT10LP1_WITH_ALTS_SHORT-10L-0.1MM-SM	single_brd[12A5]
XW16	SHORT10LP1_WITH_ALTS_SHORT-10L-0.1MM-SM	single_brd[5A3]
XW17	SHORT10LP1_WITH_ALTS_SHORT-10L-0.1MM-SM	single_brd[12D2]
XW18	SHORT10LP1_WITH_ALTS_SHORT-10L-0.1MM-SM	single_brd[12C3]
XW19	SHORT10LP1_WITH_ALTS_SHORT-10L-0.1MM-SM	single_brd[12C2]
XW20	SHORT10LP1_WITH_ALTS_SHORT-10L-0.1MM-SM	single_brd[12B2]
XW21	SHORT_SM	single_brd[16B5]
XW22	SHORT_SM	single_brd[16B5]
XW23	SHORT_SM	single_brd[14C3]
XW24	SHORT_SM	single_brd[14C3]
XW25	SHORT10LP1_WITH_ALTS_SHORT-10L-0.1MM-SM	single_brd[16C3]
XW26	SHORT_SM	single_brd[8B4]
XW27	SHORT_SM	single_brd[11B4]
XW28	SHORT_SM	single_brd[13B6]
XW29	SHORT_SM	single_brd[13B6]
XW30	SHORT_SM	single_brd[13B6]
XW31	SHORT_SM	single_brd[20B6]
XW32	SHORT10LP1_WITH_ALTS_SHORT-10L-0.1MM-SM	single_brd[2B1]
XW33	SHORT10LP1_WITH_ALTS_SHORT-10L-0.1MM-SM	single_brd[12A3]
XW34	SHORT_SM	single_brd[17B4]
XW35	SHORT_SM	single_brd[17A4]
XW36	SHORT_SM	single_brd[17D5]
XW37	SHORT_SM	single_brd[17B4]
XW38	SHORT_SM	single_brd[16C3]
XW201_RF	SHORT10LP1_WITH_ALTS_SHORT-10L-0.1MM-SM	radio_mlb[26D5]single_brd[21]
XW202_RF	SHORT10LP1_WITH_ALTS_SHORT-10L-0.1MM-SM	radio_mlb[26D5]single_brd[21]
XW204_RF	SHORT10LP1_WITH_ALTS_SHORT-10L-0.1MM-SM	radio_mlb[26D5]single_brd[21]
XW206_RF	SHORT10LP1_WITH_ALTS_SHORT-10L-0.1MM-SM	radio_mlb[26C5]single_brd[21]
XW207_RF	SHORT10LP25_WITH_ALTS_SHORT-10L-0.25MM-SM	radio_mlb[27C2]single_brd[21]
XW208_RF	SHORT10LP25_WITH_ALTS_SHORT-10L-0.25MM-SM	radio_mlb[28B6]single_brd[21]
XW209_RF	SHORT10LP25_WITH_ALTS_SHORT-10L-0.25MM-SM	radio_mlb[27B2]single_brd[21]
XW210_RF	SHORT10LP25_WITH_ALTS_SHORT-10L-0.25MM-SM	radio_mlb[28B6]single_brd[21]
XW211_RF	SHORT10LP25_WITH_ALTS_SHORT-10L-0.25MM-SM	radio_mlb[27B2]single_brd[21]
XW303_RF	SHORT10LP1_WITH_ALTS_SHORT-10L-0.1MM-SM	radio_mlb[28A4]single_brd[21]
XW304_RF	SHORT10LP1_WITH_ALTS_SHORT-10L-0.1MM-SM	radio_mlb[28A3]single_brd[21]
XW901_RF	SHORT10LP1_WITH_ALTS_SHORT-10L-0.1MM-SM	radio_mlb[33D6]single_brd[21]
XW902_RF	SHORT10LP1_WITH_ALTS_SHORT-10L-0.1MM-SM	radio_mlb[33D6]single_brd[21]
XW903_RF	SHORT10LP1_WITH_ALTS_SHORT-10L-0.1MM-SM	radio_mlb[33D6]single_brd[21]
XW904_RF	SHORT10LP1_WITH_ALTS_SHORT-10L-0.1MM-SM	radio_mlb[33D4]single_brd[21]
XW905_RF	SHORT10LP1_WITH_ALTS_SHORT-10L-0.1MM-SM	radio_mlb[33D4]single_brd[21]
XW906_RF	SHORT10LP1_WITH_ALTS_SHORT-10L-0.1MM-SM	radio_mlb[33D4]single_brd[21]
XW907_RF	SHORT10LP1_WITH_ALTS_SHORT-10L-0.1MM-SM	radio_mlb[33C7]single_brd[21]
XW908_RF	SHORT10LP1_WITH_ALTS_SHORT-10L-0.1MM-SM	radio_mlb[33B7]single_brd[21]
XW909_RF	SHORT10LP1_WITH_ALTS_SHORT-10L-0.1MM-SM	radio_mlb[33A7]single_brd[21]
XW1202_RF	SHORT10LP25_WITH_ALTS_SHORT-10L-0.25MM-SM	radio_mlb[36C7]single_brd[21]
XW1203_RF	SHORT10LP25_WITH_ALTS_SHORT-10L-0.25MM-SM	radio_mlb[36C7]single_brd[21]
XW1801_RF	SHORT_SHORT-01005	radio_mlb[42C8]single_brd[21]
XW1802_RF	SHORT_SHORT-0201	radio_mlb[42D7]single_brd[21]
Y1	CRYSTAL_4PIN1_1.60X1.20MM-SM	single_brd[2C2]
Y2	CRYSTAL_2012-1	single_brd[12A7]
Y301_RF	CRYSTAL_4PIN1_2.5X2.0MM-SM1	radio_mlb[28B4]single_brd[21]