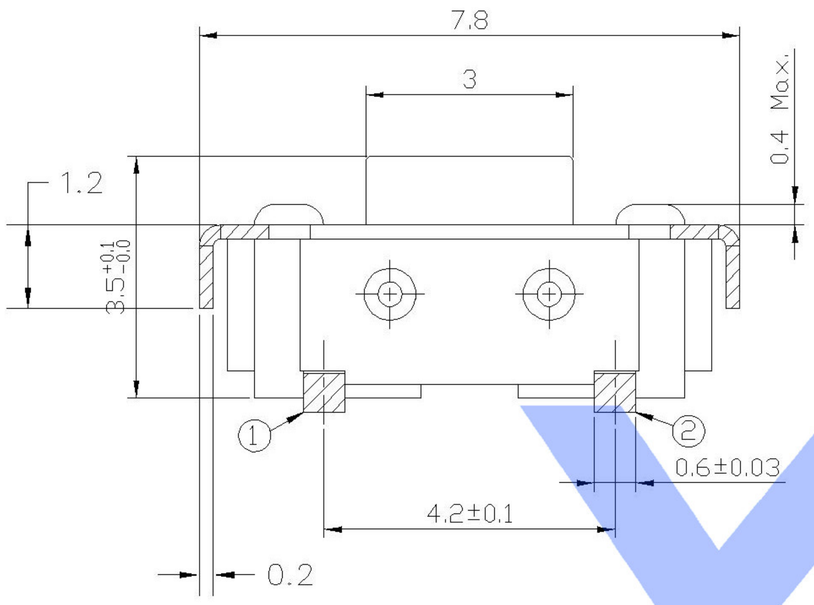

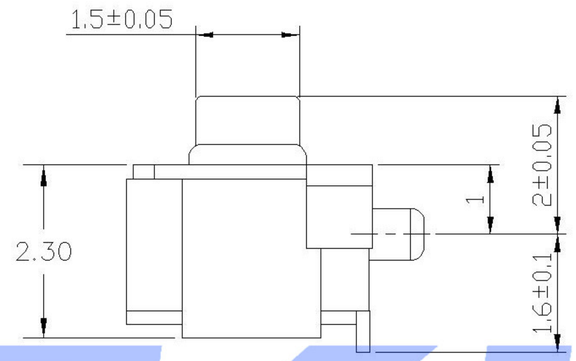

CIRCUIT DIAGRAM

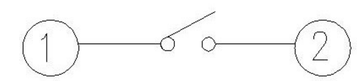

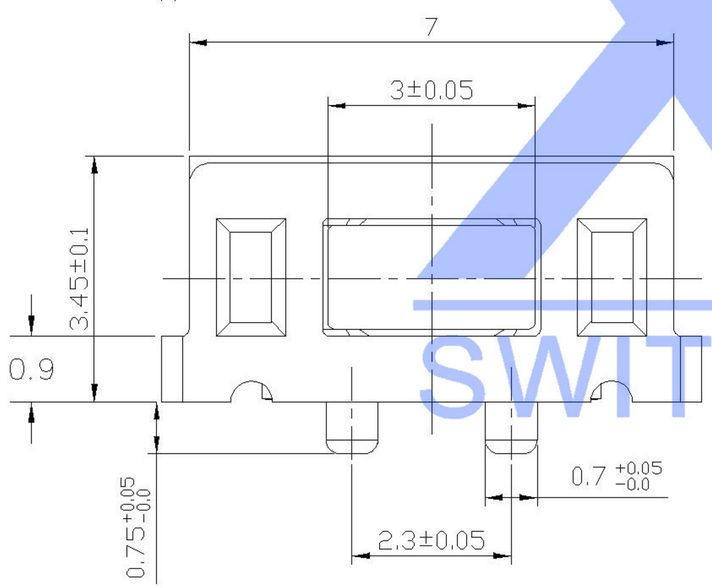

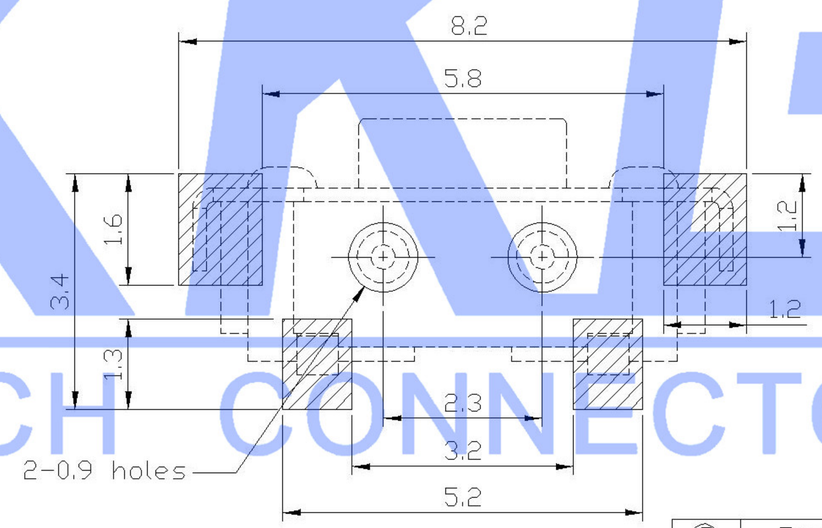

SPECIFICATION

Contact Rating:	50mA,12V DC
Contact Resistance:	100mΩ max
Insulation Resistance:	100mΩ min.500V DC
Dielectric Strength:	250V AC/1minute
Travel:	0.25mm
Operating Temp:	-30℃~+85℃
Storage Temp:	-30℃~+80℃

PAPT NO	TS-1101VS-X-X-X
Operating Force	A:100gf B:160gf C:260gf
Height	H:3.5
Fixed column	A:With B:without
Keystake	A:PA46: B:Silica gel

ITEM	PAPT NAMF	TER,NO	QTY	MATERIAL	FINISHING	REMARK
⑤	Terminal	——	2	Brass (0.30t)	Plating silvering	——
④	Contact	——	1	F.ag/Sus	Natural	——
③	Base	——	1	Lcp		——
②	Cover	——	1	Brass	Plating Nickel	——
①	Keystake	——	1	Pa46		——

MARK	DESCRIPTION	DATE	REVISED	APPROVED
△X				
△X				
△X				

REVISIONS

units:	mm
tolerance:	
X.X	±0.2mm
X.XX	±0.1mm
X.XXX	±0.05mm

UNSPECIFIED TOLERANCES

DSND		DATE		SCALE: N/A
DWN		DATE		VIEW:
CHKD		DATE		UNIT: mm
APPD		DATE		SIZE: A4

XKB INDUSTRIAL PRECISION CO.,LIMITED

MODEL TYPE: TACT SWITCH

PART NO.:

DWG NO.: TS-1101VS-X-X-A

WEIGHT	SHEET	REVISION
1.0g	1/1	A0

www.xk-dg.cn www.helloxkb.com www.helloxkb.cn

XKB SWITCH CONNECTOR