环保物料

TEL:0769-82001899

尺寸 \ Pin数	2P	3P	4P	5P	6P	7P	8P	9P	10P	11P	12P	13P	14P	15P
A	1.50	3.00	4.50	6.00	7.50	9.00	10.50	12.00	13.50	15.00	16.50	18.00	19.50	21.00
B	4.50	6.00	7.50	9.00	10.50	12.00	13.50	15.00	16.50	18.00	19.50	21.00	22.50	24.00

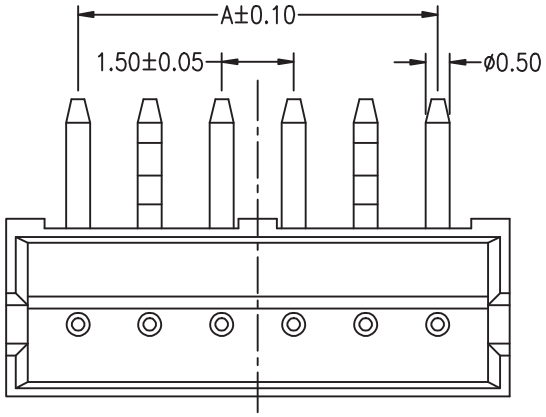

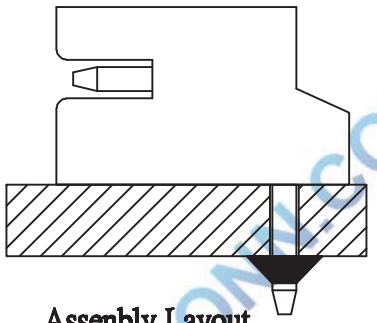

Assenbly Layout

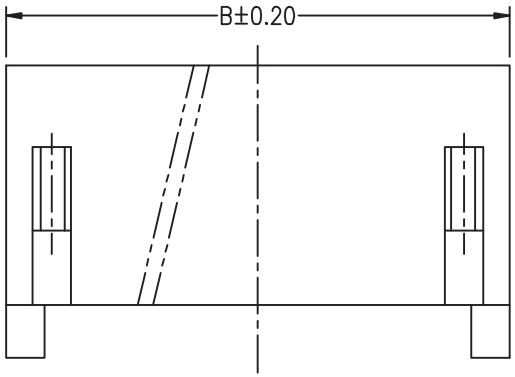

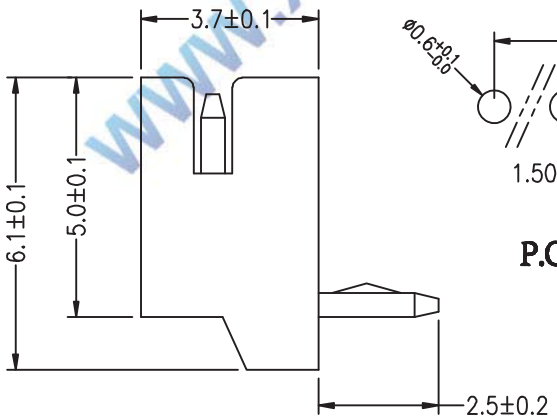

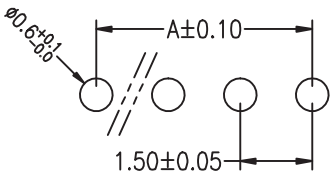

P.C.B Layout

WWW.XFCONN.COM

SPECIFICATIONS

1.Voltage rating: 100V AC, DC
2.Current rating: 1A, AC, DC
3.Withstanding Voltage: 500V AC/minute
4.Insulation resistance:500MΩ min
5.Temperature range: -25° C-+85° C
6.Contact resistance: 20mΩ max

WAFER
Housing Material: PA46 UL 94V0
Pin Material: Phosphor Bronze or Brass
Contact Area Plating: Plated Tin or Plated Gold
Mates with :P1510 series Housing
Poles:02-16P
Part No.: M1510R-xx-46

xx — Pin位数

VER	MODIFICATION	DRAW	DATE
A0			

TOLERANCE UNLESS OTHERWISE

X.	±0.30	X°	±5°
.X	±0.20	.X°	±2°
.XX	±0.08	.XX°	±1°
.XXX	±0.03	.XXX°	±0.5°

DRAWN	CK tan
CHKD	
APPD	
VIEW	

XFCN兴飞连接器有限公司
CONNECTORS XFCN CONNECTORS CO., LTD.

PRODUCT NAME	1.50mm Crimp Style Connectors
PART. NO.	M1510R-xx-46

SHEET	1/1
DATE	2010. 4. 12
UNITS	mm
SCALE	1:1
DWG NO.	009