© – TE Connectivity. All Rights Reserved.

REVISIONS					
P	LTR	DESCRIPTION	DATE	DWN	APVD
	G4	REVISED PER ECO-22-160714	27JUN2022	MP	JK

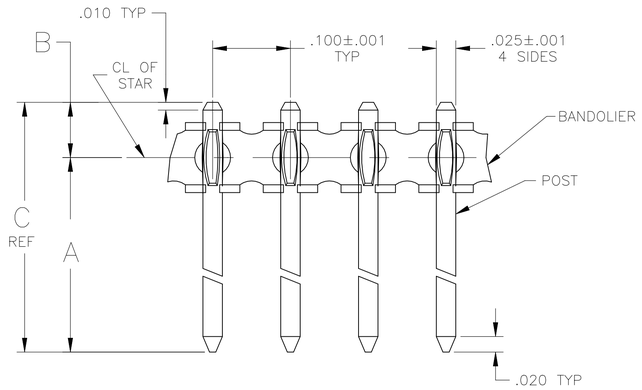

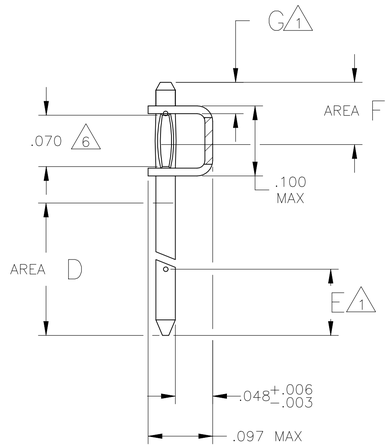

1. POINT OF MEASUREMENT FOR PLATING THICKNESS

2. .000030 GOLD ON AREA D, .000100 – .000200 MATTE TIN–LEAD ON AREA F, ALL OVER .000050 – .000100 NICKEL ENTIRE POST

3. .000100 – .000200 BRIGHT TIN–LEAD OVER .000050 – .000100 NICKEL ENTIRE POST

4. RECOMMENDED P.C.BOARD HOLE SIZE:

P C BOARD THICKNESS	PLATED HOLE SIZE	UNPLATED HOLE SIZE
.062	.034±.002	.036±.002
.093	.034±.002	.036±.002
.125	.034±.002	.036±.002

5. .000015 GOLD ON AREA D, .000100 – .000200 MATTE TIN–LEAD ON AREA F, ALL OVER .000050 – .000100 NICKEL ENTIRE POST.

6. DIMENSION PERTAINS TO THE LENGTH OF THE INTERFERENCE AREA OF THE STAR.

7. ~~PRELIMINARY PART – NOT RELEASED FOR PRODUCTION.~~

8. .000030 GOLD ON AREA D, .000100–.000200 MATTE TIN ON AREA F. ALL OVER .000050 – .000100 NICKEL ENTIRE POST.

9. .000100–.000200 MATTE TIN OVER .000050 – .000100 NICKEL ENTIRE POST.

10. .000015 GOLD ON AREA D, .000100–.000200 MATTE TIN ON AREA F, ALL OVER .000050 – .000100 NICKEL ENTIRE POST.

11. ROHS 2002/95/EC COMPLIANT.

12. OBSOLETE PARTS: OBSOLETE CIS STREAMLINING PER D.RENAUD/D.SINISI

	G	F	E	D	C	B	A	ASSEMBLY PART NUMBER	FINISH	MATING HEIGHT ABOVE BOARD (REF)
	.245	.015	.080	.080	.230	.451	.071	.380	6-103577-9 (11)	10
12 OBSOLETE	.235	.015	.080	.100	.185	.341	.071	.270	6-103577-7 (11)	10
	.283	.015	.080	.100	.185	.389	.071	.318	6-103577-5 (11)	10
12 OBSOLETE	.318	.015	.080	.100	.200	.424	.071	.353	6-103577-3 (11)	10
	.235	–	–	–	–	.341	.071	.270	6-103577-1 (11)	9
12 OBSOLETE	.283	–	–	–	–	.389	.071	.318	5-103577-9 (11)	9
12 OBSOLETE	.318	–	–	–	–	.424	.071	.353	5-103577-7 (11)	9
	.235	.015	.080	.100	.185	.341	.071	.270	5-103577-5 (11)	8
	.283	.015	.080	.100	.185	.389	.071	.318	5-103577-3 (11)	8
	.318	.015	.080	.100	.200	.424	.071	.353	5-103577-1 (11)	8
12 OBSOLETE	.245	.015	.080	.080	.230	.451	.071	.380	1-103577-9	5
	.235	.015	.080	.100	.185	.341	.071	.270	1-103577-7	5
	.283	.015	.080	.100	.185	.389	.071	.318	1-103577-5	5
	.318	.015	.080	.100	.200	.424	.071	.353	1-103577-3	5
	.235	–	–	–	–	.341	.071	.270	1-103577-1	3
12 OBSOLETE	.283	–	–	–	–	.389	.071	.318	103577-9	3
	.318	–	–	–	–	.424	.071	.353	103577-7	3
	.235	.015	.080	.100	.185	.341	.071	.270	103577-5	2
	.283	.015	.080	.100	.185	.389	.071	.318	103577-3	2
	.318	.015	.080	.100	.200	.424	.071	.353	103577-1	2

THIS DRAWING IS A CONTROLLED DOCUMENT.

DIMENSIONS: INCHES

TOLERANCES UNLESS OTHERWISE SPECIFIED:
0 PLC ± –
1 PLC ± –
2 PLC ± –
3 PLC ± .005
4 PLC ± –
ANGLES ± –

MATERIAL: BANDOLIER – BRASS; POST–PHOS BRONZE
FINISH: BANDOLIER – NONE; POST–SEE TABLE

DWN G.DOUTY 12AUG87
CHK R.FEIDT 12SEP87
APVD R.FLICKER 12SEP87
PRODUCT SPEC –
APPLICATION SPEC –
WEIGHT 0.000000

TE Connectivity

NAME: ASSEMBLY, BANDOLIER, .100 CL, .025 SQUARE POSTS –

SIZE A1 | CAGE CODE 00779 | DRAWING NO C-103577 | RESTRICTED TO –

CUSTOMER DRAWING | SCALE 10:1 | SHEET 1 OF 1 | REV G4

4805 (1/15)