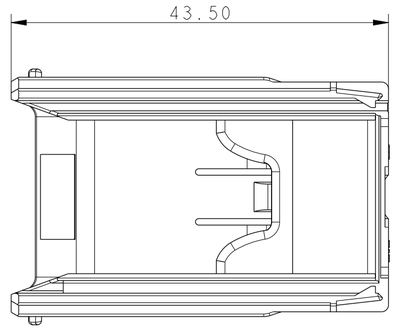


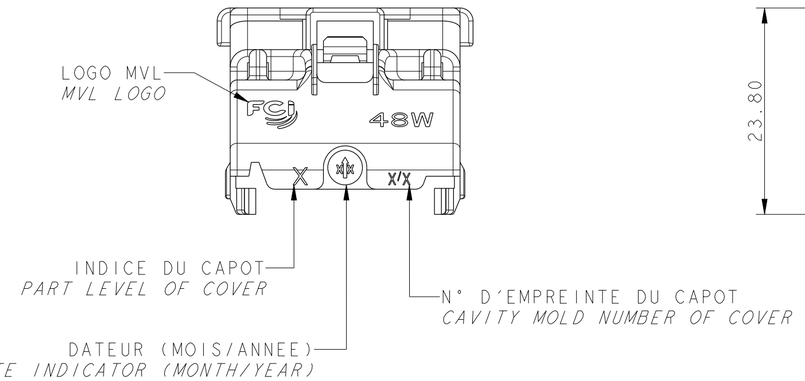


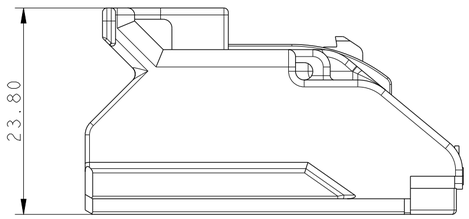


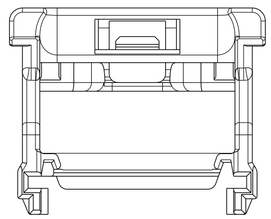

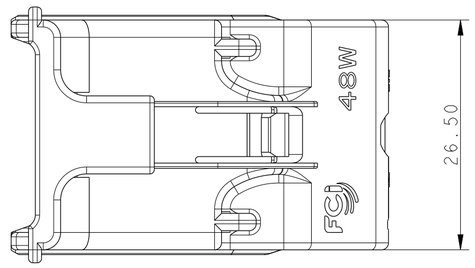


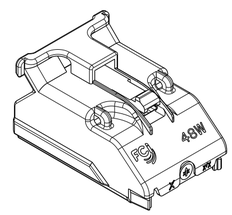


SCALE 1:1

**SPECIFICATION DE CONDITIONNEMENT**
***PACKAGING SPECIFICATION***

FE PA 06 013

**CAHIER DES CHARGES**
***SPECIFICATION***

NF R 13-462
FE PS 07 023

**MISE EN OEUVRE / *APPLICATION SPECIFICATION***

DOSSIER DE PRECONISATION / *USER'S MANUAL* : PU 192

| CAPOT/COVER MVL REF. P/N | CAPOT/COVER MVL REV. REV. | CAPOT/COVER DELPHI REF. P/N | CAPOT/COVER DELPHI REV. REV. | MODULE MODULE | CODAGE CODING | ETANCHEITE SEALING | SORTIE FAISEAU WIRING OUT | MVL REF P/N | MVL IND. REV. | DELPHI REF P/N | DELPHI IND. REV. |
|---|---|---|---|---|---|---|---|---|---|---|---|
| PPI0001524 | B | 33500794 | 01 | 48 VOIES VERSION A 48 WAY VERSION A | NOIR BLACK | NON ETANCHE UNSEALED | GAUCHE LEFT | - | B | 33404758 | 01 |
| | | | | | | | DROIT RIGHT | - | B | 33404759 | 01 |
| | | | | | | ETANCHE SEALED | GAUCHE LEFT | - | B | 33404756 | 01 |
| | | | | | | | DROIT RIGHT | - | B | 33404757 | 01 |
| | | | | | GRIS GREY | NON ETANCHE UNSEALED | GAUCHE LEFT | - | B | 33404762 | 01 |
| | | | | | | | DROIT RIGHT | - | B | 33404763 | 01 |
| | | | | | | ETANCHE SEALED | GAUCHE LEFT | - | B | 33404760 | 01 |
| | | | | | | | DROIT RIGHT | - | B | 33404761 | 01 |
| | | | | | MARRON BROWN | NON ETANCHE UNSEALED | GAUCHE LEFT | - | B | 33404764 | 01 |
| | | | | | | | DROIT RIGHT | - | B | 33404765 | 01 |
| | | | | | | ETANCHE SEALED | GAUCHE LEFT | PPI0001498 | B | 33500501 | 01 |
| | | | | | | | DROIT RIGHT | PPI0001499 | B | 33500502 | 01 |

PRODUITS ASSOCIES / *ASSOCIATED PARTS*

| | | |
|---|---|---|
| 14-06201 | - | - |
| | - | - |
| | - | - |
| | - | - |
| | - | CREATION |

| ECN-NO. *NUMERO ECN* | POSITION *POSITION* | CHANGE DESCRIPTION *MODIFICATION* |
|---|---|---|

PRODUCT SPEC. *SPECIF. PRODUIT*: SEE TABLE
PACKAGING SPEC. *SPECIF. EMBALLAGE*: SEE TABLE
APPLICATION SPEC. *SPECIF. APPLICATION*: SEE TABLE

COPYRIGHT DELPHI CORPORATION AND/OR ITS AFFILIATES. ALL RIGHTS RESERVED. REVISED
THIS DRAWING IS THE PROPERTY OF DELPHI CORPORATION AND CONTAINS DELPHI CONFIDENTIAL INFORMATION. THE REPRODUCTION, DISTRIBUTION AND UTILIZATION OF THIS DOCUMENT OR ITS RELATED CAD MATH DATA, AS WELL AS COMMUNICATION OF ANY CONTENT TO OTHERS, WITHOUT EXPRESS AUTHORIZATION, IS PROHIBITED.
CE PLAN EST LA PROPRIETE DE DELPHI CORPORATION ET CONTIENT DES INFORMATIONS DELPHI CONFIDENTIELLES. LA REPRODUCTION, LA DISTRIBUTION ET L'UTILISATION DE CE DOCUMENT OU DE SES DONNEES MATHEMATIQUES CAO, AINSI QUE LA COMMUNICATION DE TOUT CONTENU A AUTRUI, SANS AUTORISATION EXPRESSE, EST INTERDITE.

TOLERANCES *TOLERANCES*: ±0.3 ±2° -
MATERIAL : *MATIERE* : PBT GF 15
SURFACE FINISH *ETAT DE SURFACE*
COUNTERPART Nr. *CONTRE-PARTIE N°*
COLOUR : *COULEUR* : NOIR / BLACK
DO NOT MEASURE DRAWING *NE PAS PRENDRE DE COTES*
TOOL NO. *OUTIL N°*
ECO Loc. Code *CODE B.E.* FE

| | DATE | NAME |
|---|---|---|
| CREATED BY *CREE PAR* | 2014/06/10 | S LACOTE |
| MODIFIED BY *MODIF. PAR* | 2014/06/12 | S LACOTE |
| CHECKED BY *VERIF. PAR* | 2014/06/12 | F FAURIE |
| APPROVED BY *APPR. PAR* | 2014/06/12 | Pascal MENARD |

FILE NAME *NOM DE FICHIER* PCC0845627
DOCUMENT UNDER PDS CONTROL *DOCUMENT GERE SOUS P.D.S.*
NO MODIFICATION ALLOWED OUTSIDE *PAS DE MODIFICATION EN DEHORS*

TITLE *DESIGNATION*: COVER 48W VERSION A GENERIC
PROJECT *PROJET*: CMC PROJECT
ESR NO. *NUMERO ESR*
CAT. NO. *NUMERO CAT*

DELPHI
DELPHI PACKARD ELECTRICAL/ELECTRONIC ARCHITECTURE
EPERNON, FRANCE

CAD SYSTEM: pro / eng.
ISO PROJECTION *PROJECTION ISO*
DIMENSION IN MILLIMETERS *DIMENSIONS EN MILLIMETRES*
DWG SIZE *FORMAT*: A2
DRAWING NUMBER *REF. PLAN*: PCC0845627
REV. *IND.*: A
APPROVAL LEVEL *NIV. D'APPROBATION*: -
STATE *ETAT*: SERIAL RELEASED
SHEET *FEUILLE*: 1 of 1 sur 1
PART NUMBER *REF. ARTICLE*: PPI0001524
REV. *IND.*: B
SCALE *ECH.*: 2:1

EUR C04 112 F29 PDS

# Mouser Electronics

Authorized Distributor

Click to View Pricing, Inventory, Delivery & Lifecycle Information:

Aptiv:
PPI0001524