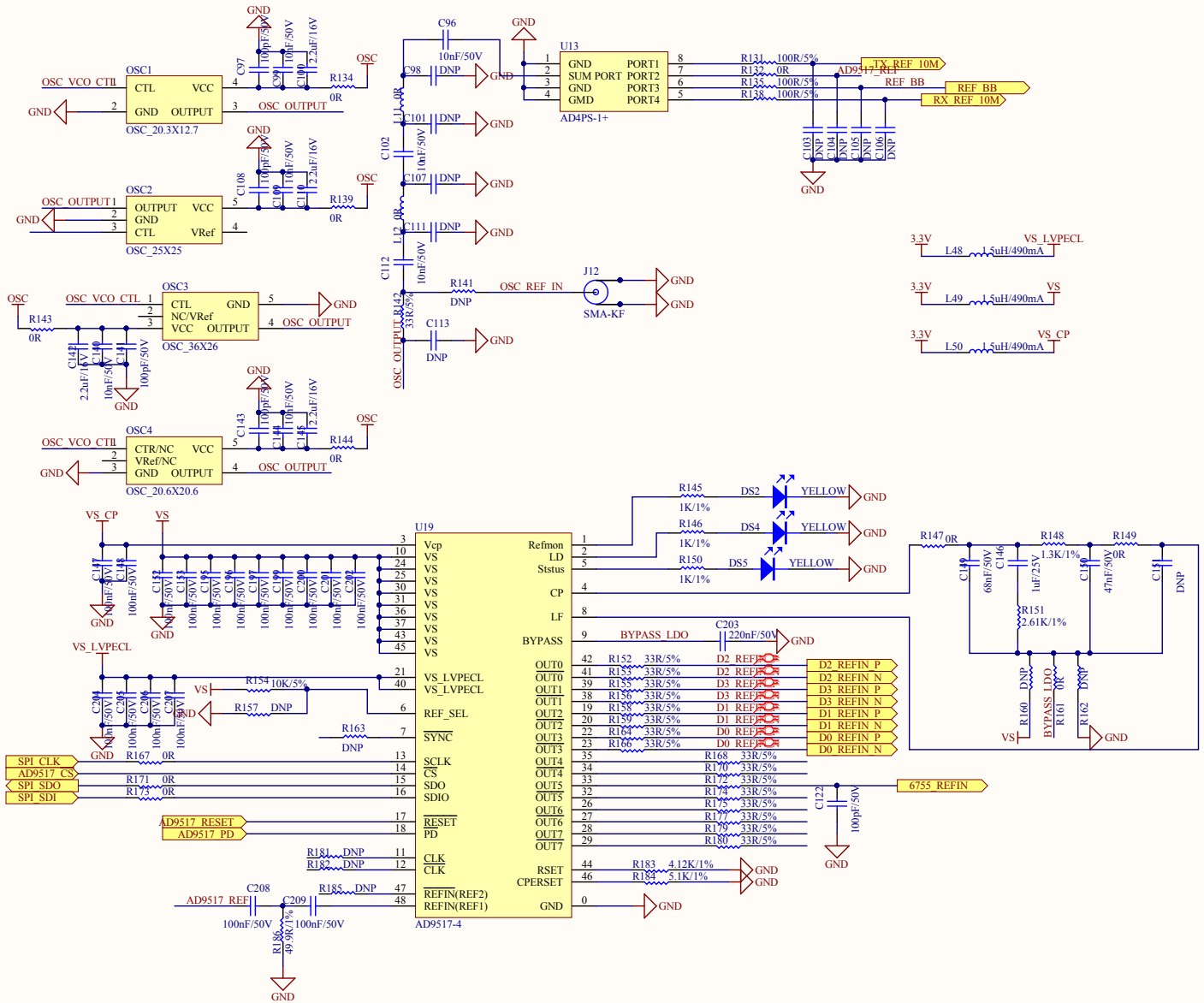

Title		
Size A3	Number	Revision
Date: 2016/4/19	Sheet of	
File: E:\xu work\..\CLK_Distribution.SchDoc	Drawn By:	