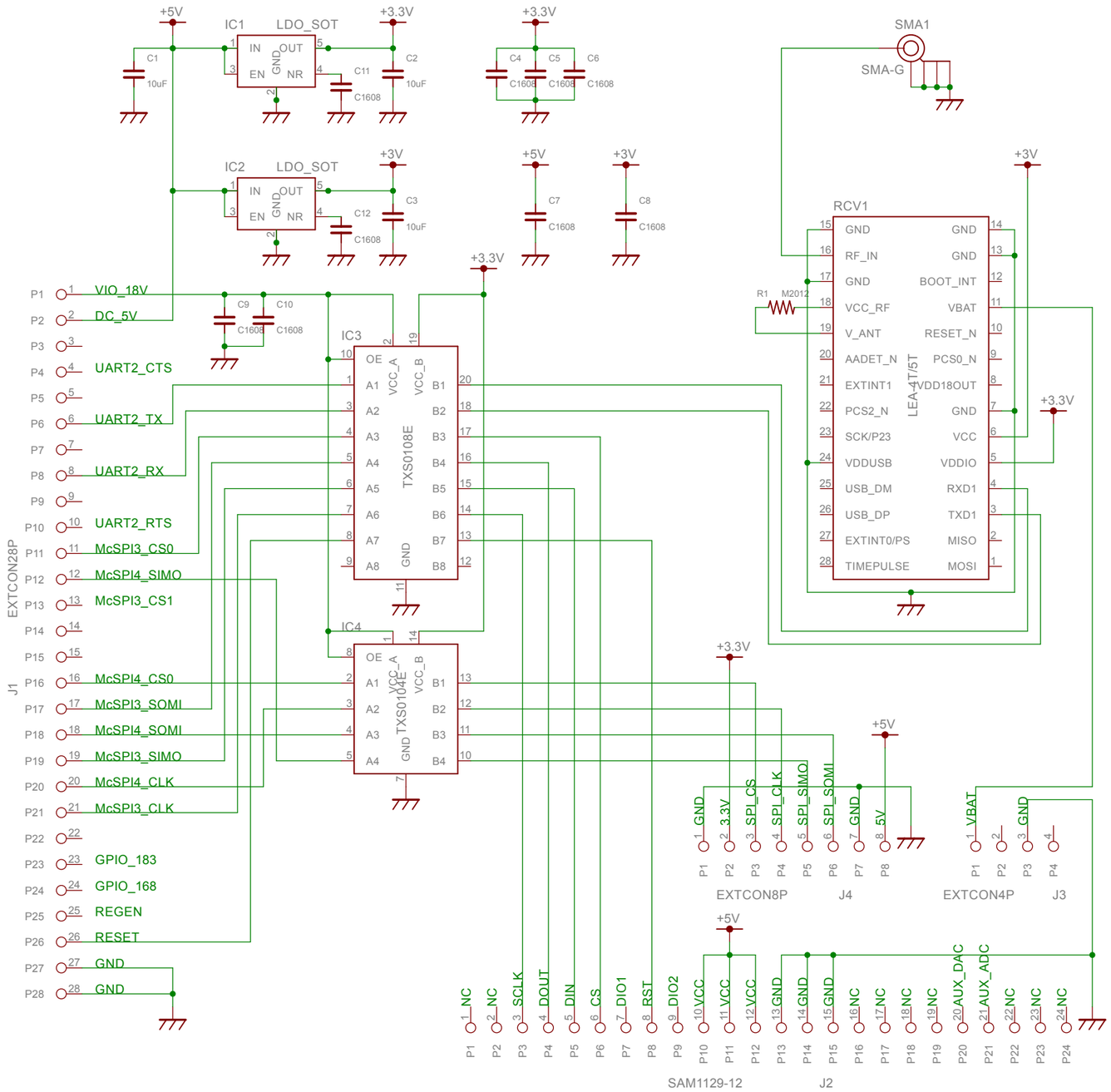
IC1 LDO_SOT
IC2 LDO_SOT
IC3 TXS0108E
IC4 TXS0104E
RCV1 LEA-4T/5T
SMA1
SMA-G
EXTCON28P J1
EXTCON8P J4
EXTCON4P J3
SAM1129-12 J2
VIO_18V
DC_5V
UART2_CTS
UART2_TX
UART2_RX
UART2_RTS
McSPI3_CS0
McSPI4_SIMO
McSPI3_CS1
McSPI4_CS0
McSPI3_SOMI
McSPI4_SOMI
McSPI3_SIMO
McSPI4_CLK
McSPI3_CLK
GPIO_183
GPIO_168
REGEN
RESET
GND
SCLK
DOUT
DIN
CS
DIO1
RST
DIO2
VCC
AUX_DAC
AUX_ADC
NC
SPI_CS
SPI_CLK
SPI_SIMO
SPI_SOMI
3.3V
5V
VBAT