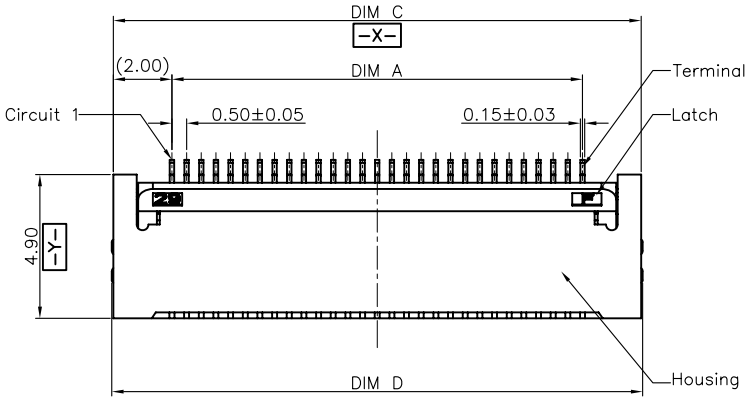

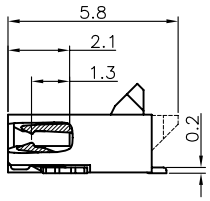

SECTION A–A
SCALE 1:1

Note:
1. Material:
  1.1 Housing: thermoplastic high temp.UL94V–0; Color: natural.
  1.2 Latch: thermoplastic high temp.UL94V–0; Color: black.
  1.3 Terminal: copper alloy.
  1.4 Fitting Nail: copper alloy.
2. Finsh:
  2.1 Terminal:
    Underplating: Au/matt Tin overall.
  2.2 Fitting Nail:
    Underplating: matt Tin overall.
3. Product must comply HF RoHS specification.
4. Product No:

AFC24–S ** F I A – 00

CKTS
CONTACTS TYPE
E:Upper
F:Lower
PLATING
I:Gold Point 1u"
PACKING
A:Tape&Reel
C:Tube
REMARKS
HF:Halogen free

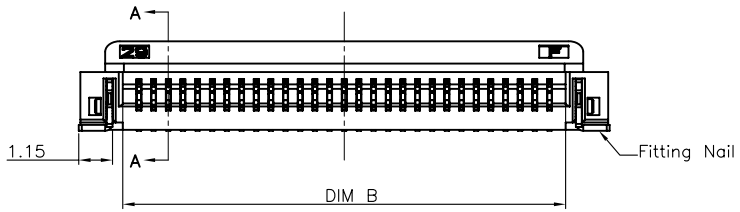

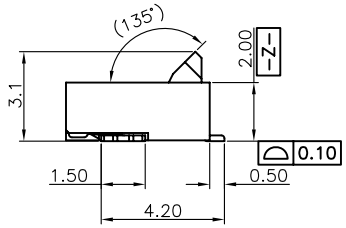

CKTS	DIM A	DIM B	DIM C	DIM D
4	1.50	2.60	5.50	5.60
5	2.00	3.10	6.00	6.10
6	2.50	3.60	6.50	6.60
7	3.00	4.10	7.00	7.10
8	3.50	4.60	7.50	7.60
9	4.00	5.10	8.00	8.10
10	4.50	5.60	8.50	8.60
11	5.00	6.10	9.00	9.10
12	5.50	6.60	9.50	9.60
13	6.00	7.10	10.00	10.10
14	6.50	7.60	10.50	10.60
15	7.00	8.10	11.00	11.10
16	7.50	8.60	11.50	11.60
17	8.00	9.10	12.00	12.10
18	8.50	9.60	12.50	12.60
19	9.00	10.10	13.00	13.10
20	9.50	10.60	13.50	13.60
21	10.00	11.10	14.00	14.10
22	10.50	11.60	14.50	14.60
23	11.00	12.10	15.00	15.10
24	11.50	12.60	15.50	15.60
25	12.00	13.10	16.00	16.10
26	12.50	13.60	16.50	16.60
27	13.00	14.10	17.00	17.10
28	13.50	14.60	17.50	17.60
29	14.00	15.10	18.00	18.10
30	14.50	15.60	18.50	18.60
31	15.00	16.10	19.00	19.10
32	15.50	16.60	19.50	19.60
33	16.00	17.10	20.00	20.10
34	16.50	17.60	20.50	20.60
35	17.00	18.10	21.00	21.10
36	17.50	18.60	21.50	21.60
37	18.00	19.10	22.00	22.10
38	18.50	19.60	22.50	22.60
39	19.00	20.10	23.00	23.10
40	19.50	20.60	23.50	23.60
41	20.00	21.10	24.00	24.10
42	20.50	21.60	24.50	24.60
43	21.00	22.10	25.00	25.10
44	21.50	22.60	25.50	25.60
45	22.00	23.10	26.00	26.10
46	22.50	23.60	26.50	26.60
47	23.00	24.10	27.00	27.10
48	23.50	24.60	27.50	27.60
49	24.00	25.10	28.00	28.10
50	24.50	25.60	28.50	28.60
51	25.00	26.10	29.00	29.10
52	25.50	26.60	29.50	29.60
53	26.00	27.10	30.00	30.10
54	26.50	27.60	30.50	30.60
55	27.00	28.10	31.00	31.10
56	27.50	28.60	31.50	31.60
57	28.00	29.10	32.00	32.10
58	28.50	29.60	32.50	32.60
59	29.00	30.10	33.00	33.10
60	29.50	30.60	33.50	33.60

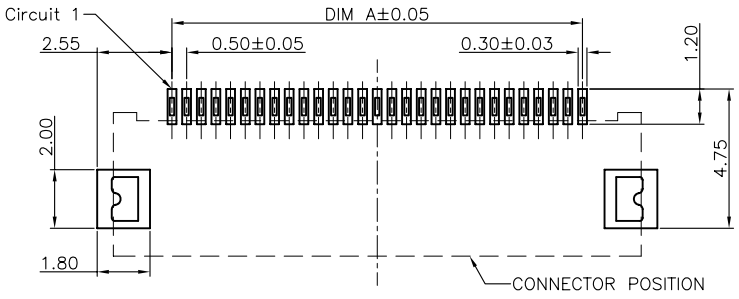

RECOMMENDED P.C.B PATTERN LAYOUT

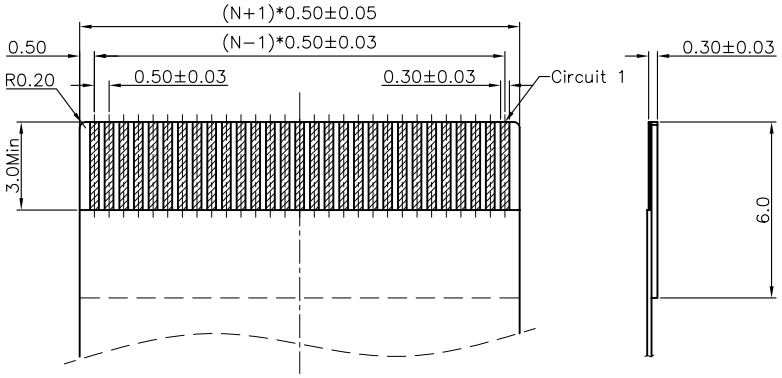

RECOMMENDED FPC/FFC DIMENSION

Rev 版本	Change Description 变更内容	Date 日期	Revisor 制/修订人
A	初版发行	2012/01/03	Allan

CUSTOMER DRAWING

Tolerance Unspecified (未注公差)
0.0 ±0.15 0°. ±5°
0.00 ±0.10 0°.0 ±3°
0.000 ±0.05 0°.00 ±1°

Project View (投影视角)

Size(图幅): A4
Unit(单位): MM
Scale(比例): 1 : 1
Page(页数): 1 OF 1
Rev(版本): A

深圳市钜硕电子有限公司

Product Name(产品名称): 0.5Pitch H=2.0 FPC Easy-on Back-Flip R/A Type1 SMT CONN

Product No(产品料号): AFC24-S**F**-**

Designer(设计): Allan 01/03'12
Checked(审核):
Approved(核准):