MAPX	MODIFICATION	DATE

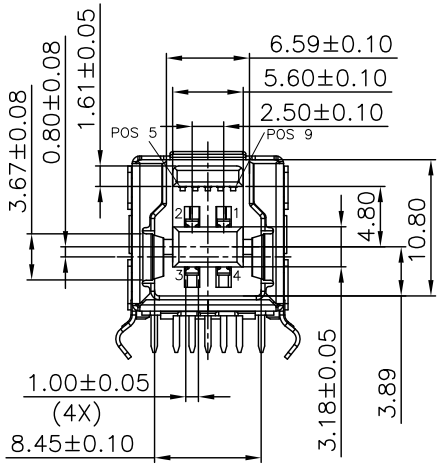

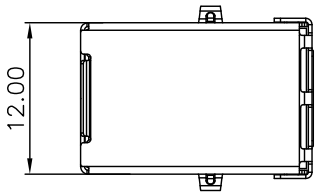

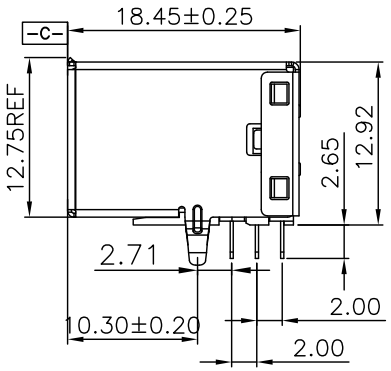

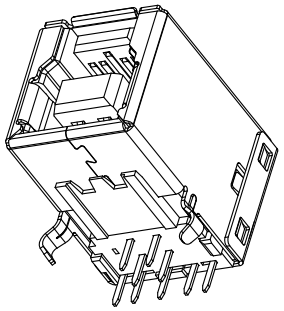

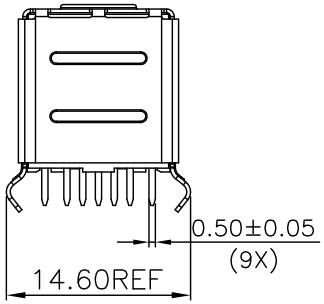

SPECIFCATIONS:
Contact current Rating:
1.8 Amperes for pin1&pin4.
0.25 Amperes other contacts
Dielectric Withstanding Voltage:AC 100V(RMS)
Insulation resistance:100Megohms Minimum.
Contact Resistance:
30mΩ Max for pin1&pin4
50mΩMax for other contacts
Mechanical Characteristics:
Mating Force:35 Newtoms.Maximum
Unmating Force:10 Newtoms.MInimum.
MATERIAL: 8N Min After Durability
Housing: PBT+30%GF 94V-0 COLOR:BLUE
Contact: copper alloy(T=0.25mm)
Shell: Brass
PLATING:
Contact: Au Plated on contact area
Tin Plated on solder area
Nickel underplating over all
Shell: Nickel Plated
operating Temperature:-55iãto+85iã

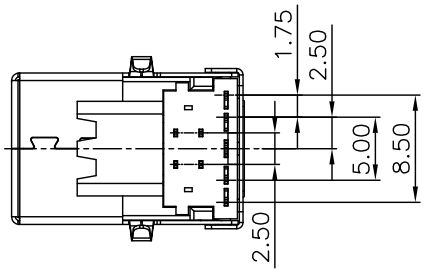

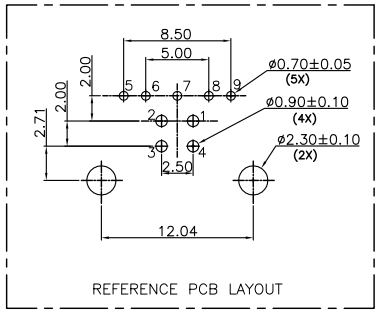

产品图 PRODUCT CHART DWG				深圳市精拓金电子有限公司					
公差一览表 TOLERANCE UNLESS OTHERMSE				单位 UNITS	MM	制图 DRAWING	Gavin	制图料号 PRODUCT PART NO.	
X.	±0.35	X.	±5.°	比例 SCALE	1:1	审核 CHKD	郭治富	产品名称 PRODUCT NO.	USB 3.0 BF 90° DIP (H=12.9)
.X	±0.30	.X	±2.°	日期 DATE	2016-02-21	核准 APPD	黄国荣	角法 VIEW	版本 VER A0
.XX	±0.20	.XX	±1.°						
.XXX	±0.10	.XXX	±0.5°						