目錄 MAPX	设变内容 MODIFICATION	日期 DATE

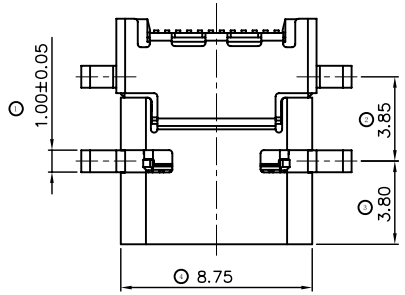

PIN	Signal Name	PIN	Signal Name
A1	GND	B12	GND
A2	SSTXp1	B11	SSRXp1
A3	SSTXn1	B10	SSRXn1
A4	VBUS	B9	VBUS
A5	CC1	B8	SBU2
A6	Dp1	B7	Dn2
A7	Dn1	B6	Dp2
A8	SBU1	B5	CC2
A9	VBUS	B4	VBUS
A10	SSRXn2	B3	SSTXn2
A11	SSRXp2	B2	SSTXp2
A12	GND	B1	GND

ITEM 项目	PARTS NAME 零件名称	Q'TY 数量	MATERIAL 材质	FINISH/REMARK 处理/备注
1	Insermold housing	1	SYNTHETIC RESIN	Black
2	12pin Insermold-(1)	1	SYNTHETIC RESIN	Black
3	12pin Insermold-(2)	1	SYNTHETIC RESIN	Black
4	SHELL	1	STAINLESS	Ni:50u" Min
5	12pin Contact-(DIP)	12	COPPER ALLOY	Gold flash on contact area 100u" Tin on solder tails, base Nickel: 50u"
6	12pin Contact-(SMT)	12	COPPER ALLOY	Gold flash on contact area 100u" Tin on solder tails, base Nickel: 50u"
7	Shield SHELL	1	STAINLESS	base Nickel: 50u" Min :Tin: 80u" Min Over All
8	Ground plate-top	1	STAINLESS	Ni:50u" Min
9	Ground plate-bottom	1	STAINLESS	Ni:50u" Min

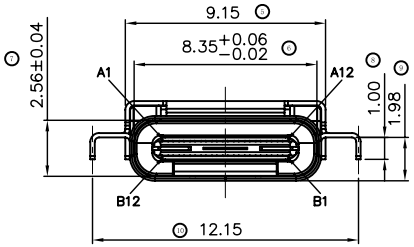

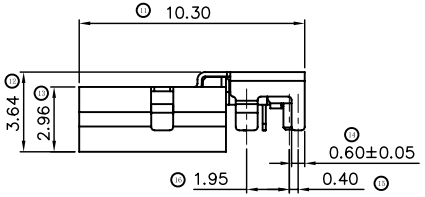

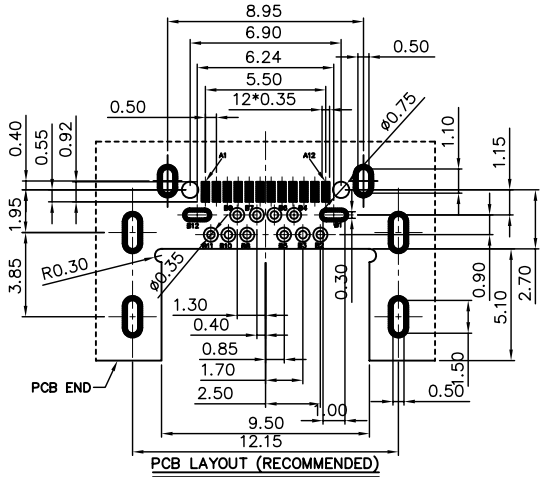

PCB LAYOUT (RECOMMENDED)

(Tol: ±0.05)

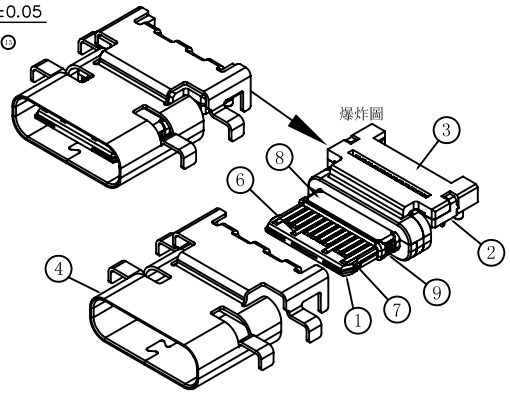

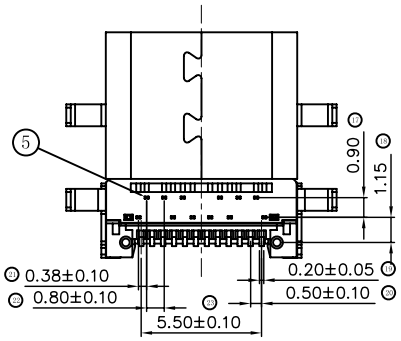

SPECIFICATION
MATERIAL
See drawing
STANDARD DATA
Rating current: 1.5A
ELECTRICAL
Insulator resistance: 100M ohms Min
Withstanding voltage: 100 VAC / minute
Contact resistance: 40 m ohms Max
MECHANICAL
Mating force: 5~20N.
Unmating force: 8~20N.
Durability: 10000 cycles Min.
PART NO.

D 1 3 -0824 - 24 001

SERIES
D=I/O Connector
TYPE
1=0.5mm pitch
CONTACT TYPE
3=SMT type

MODEL NO.

TYPE NO.
001=Type 01
CONTACT NUMBER
24=24position

产品图 PRODUCT CHART DWG			
公差一览表 TOLERANCE UNLESS OTHERWISE			
X.	±0.25	X°.	±5°
.X	±0.20	.X°	±2°
.XX	±0.15	.XX°	±1°
.XXX	±0.10	.XXX°	±0.5°

深圳市精拓金电子有限公司

单位 UNITS	MM	制图 DRAWING	Z-Y-B	产品料号 PRODUCT PART NO.	
比例 SCALE	1:1	审核 CHKD		产品名称 PRODUCT NO.	USB C TYPE CONNECTOR
日期 DATE	2015.03.14	核准 APPD		角法 VIEW	版本 VER: A0