MAPX	MODIFICATION	DATE

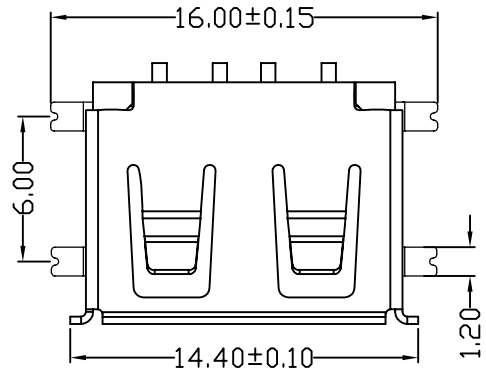

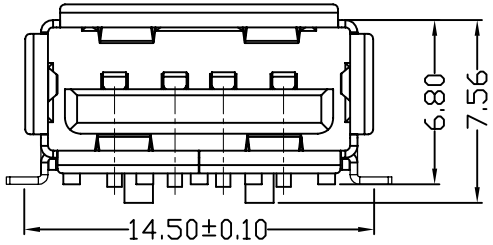

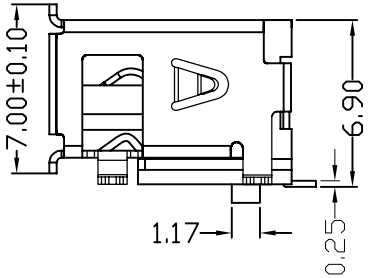

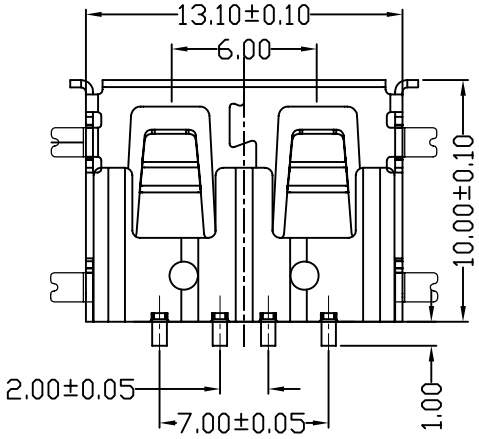

NOTES:

1.HOUSING: SEE NOTES, UL94V-0 .
TERMINAL: SEE NOTES.
SHELL: SEE NOTES.

SPECIFICATION:

1.ELECTRICAL CHARACTERISTIC:
CONTACT RESISTANCE: 30MΩ MAX
DIELECTRIC WITHSTANDING VOLTAGE: 500V AC FOR 1MIN
INSULATION RESISTANCE: 1000MΩ MIN

2.MECHANICAL CHARACTERISTIC:
INSERTION FORCE: 35N(3.57KGF) MAX
EXTRACTION FORCE: 10~35N(1.02~3.57KGF)MIN
DURABILITY: 1500 CYCLES EXTRACTION FORCE:10~35N
5000 CYCLES MIN
5000 CYCLES EXTRACTION FORCE:3~35N

3.ENVIRONMENTAL:
OPERATING TEMPERATURE: -55℃+85℃

4.Contact finish:
01:Selective Gold Flash
02:Selective Gold 3U"
03:Selective Gold 5U"
04:Selective Gold 15U"
05:Selective Gold 30U"

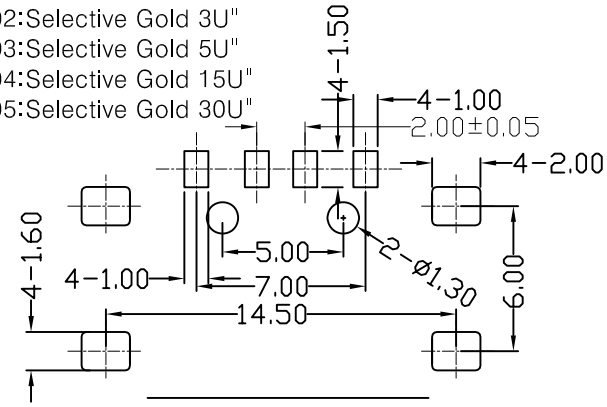

FRONT EDGE OF CONNECTOR
PCB LAYOUT

产品图 PRODUCT CHART DWG				深圳市精拓金电子有限公司						
公差一览表 TOLERANCE UNLESS OTHERMSE				单位 UNITS	MM	制图 DRAWING	Z-Y-B	制图料号 PRODUCT PART NO.	JTJ-USB-10.0/SMT-001	
X.	±0.15	X.	±5.°	比例 SCALE	1:1	审核 CHKD		产品名称 PRODUCT NO.	USB A/F 10.0有边四脚鱼叉SMT（方弹）	
.X	±0.10	.X	±2.°	日期 DATE	2013.04.24	核准 APPD		角法 VIEW		版本 VER A0
.XX	±0.05	.XX	±1.°							
.XXX	±0.03	.XXX	±0.5°							