| MAPX | MODIFICATION | DATE |
|---|---|---|
| | | |

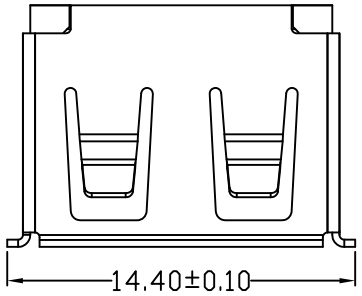


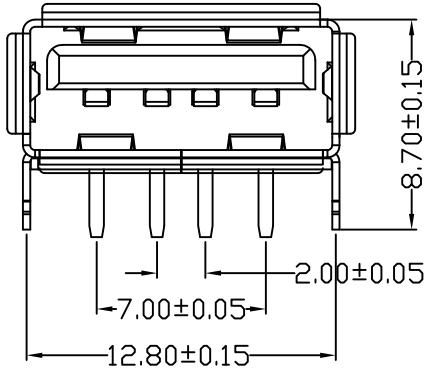


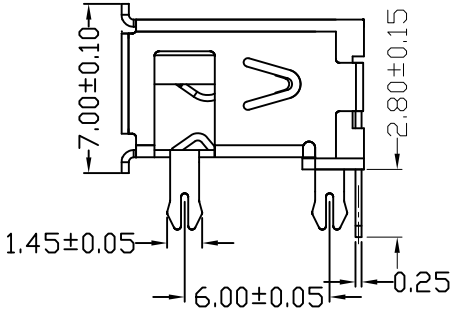


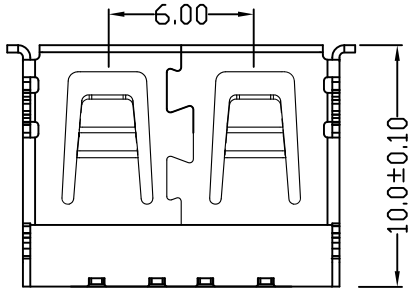


NOTES:
1.HOUSING: SEE NOTES, UL94V-0 .
TERMINAL: SEE NOTES.
SHELL: SEE NOTES.

SPECIFICATION:
1.ELECTRICAL CHARACTERISTIC:
CONTACT RESISTANCE: 30MΩ MAX
DIELECTRIC WITHSTANDING VOLTAGE: 500V AC FOR 1MIN
INSULATION RESISTANCE: 1000MΩ MIN
2.MECHANICAL CHARACTERISTIC:
INSERTION FORCE: 35N(3.57KGF) MAX
EXTRACTION FORCE: 10~35N(1.02~3.57KGF)MIN
DURABILITY: 1500 CYCLES EXTRACTION FORCE:10~35N
5000 CYCLES MIN
5000 CYCLES EXTRACTION FORCE:3~35N
3.ENVIRONMENTAL:
OPERATING TEMPERATURE: -55℃+85℃
4.Contact finish:
01:Selective Gold Flash
02:Selective Gold 3U"
03:Selective Gold 5U"
04:Selective Gold 15U"
05:Selective Gold 30U"

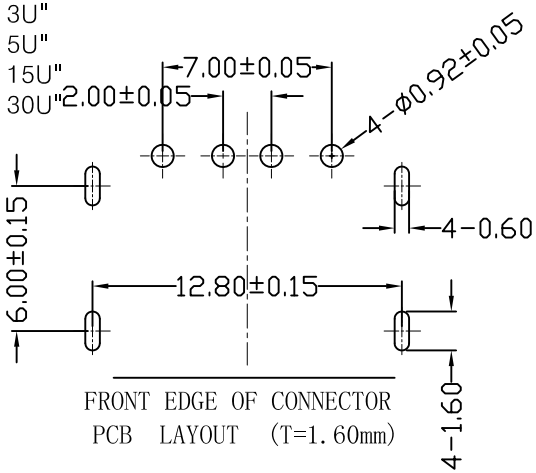


| 产品图 PRODUCT CHART DWG | | | |
|---|---|---|---|
| 公差一览表 TOLERANCE UNLESS OTHERMSE | | | |
| X. | ±0.25 | X. | ±5.° |
| .X | ±0.20 | .X | ±2.° |
| .XX | ±0.15 | .XX | ±1.° |
| .XXX | ±0.10 | .XXX | ±0.5° |

# 深圳市精拓金电子有限公司

| | | | | | |
|---|---|---|---|---|---|
| 单位 UNITS | MM | 制图 DRAWING | Z-Y-B | 制图料号 PRODUCT PART NO. | JTJ-USB-10.0-003 |
| 比例 SCALE | 1:1 | 审核 CHKD | | 产品名称 PRODUCT NO. | USB A/F 10.0有边前四脚鱼叉（方弹） |
| 日期 DATE | 2013.09.24 | 核准 APPD | | 角法 VIEW | 版本 VER A0 |