MAPX	MODIFICATION	DATE

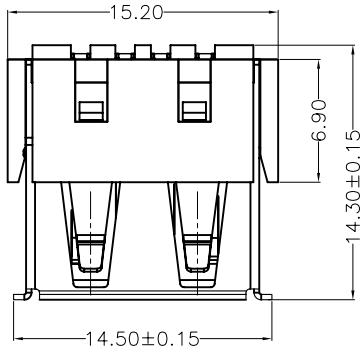

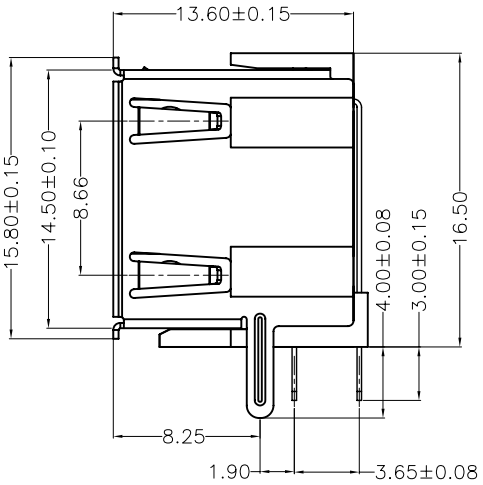

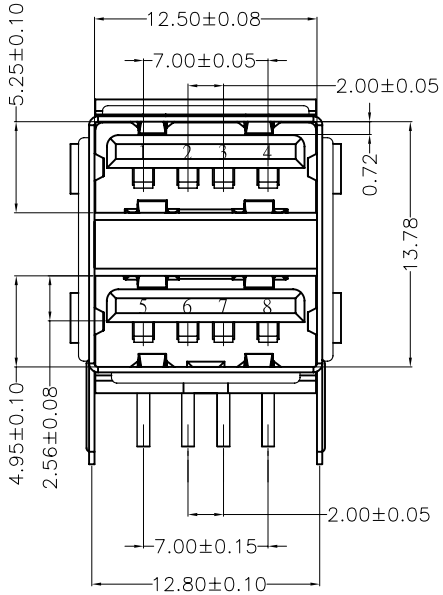

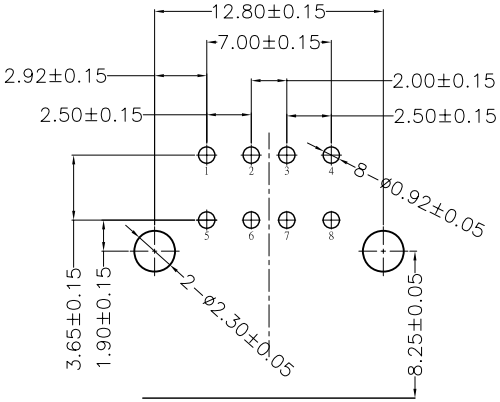

PCB Layout

NOTES:

1. HOUSING: SEE NOTES, UL94V-0 .
   TERMINAL: SEE NOTES.
   SHELL: SEE NOTES.

SPECIFICATION:

1. ELECTRICAL CHARACTERISTIC:
   CONTACT RESISTANCE: 30MΩ MAX
   DIELECTRIC WITHSTANDING VOLTAGE: 500V AC FOR 1MIN
   INSULATION RESISTANCE: 1000MΩ MIN
2. MECHANICAL CHARACTERISTIC:
   INSERTION FORCE: 35N(3.57KGF) MAX
   EXTRACTION FORCE: 10~35N(1.02~3.57KGF)MIN
3. Contact finish:
   01:Selective Gold Flash
   02:Selective Gold 3U″
   03:Selective Gold 5U″
   04:Selective Gold 15U″
   05:Selective Gold 30U″

产品图
PRODUCT CHART DWG

公差一览表
TOLERANCE UNLESS OTHERMSE

X.	±0.25	X.	±5.°
.X	±0.20	.X	±2.°
.XX	±0.15	.XX	±1.°
.XXX	±0.10	.XXX	±0.5°

深圳市精拓金电子有限公司

单位 UNITS	MM	制图 DRAWING	Z-Y-B	制图料号 PRODUCT PART NO.	JTJ-USB/双层-001
比例 SCALE	1:1	审核 CHKD		产品名称 PRODUCT NO.	USB-双层有边正向成品
日期 DATE	2014.05.06	核准 APPD		角法 VIEW	版本 VER A0