RoHS

REVISIONS				
SYM	ECN No.	MODIRICATION	DATE	ISSUED

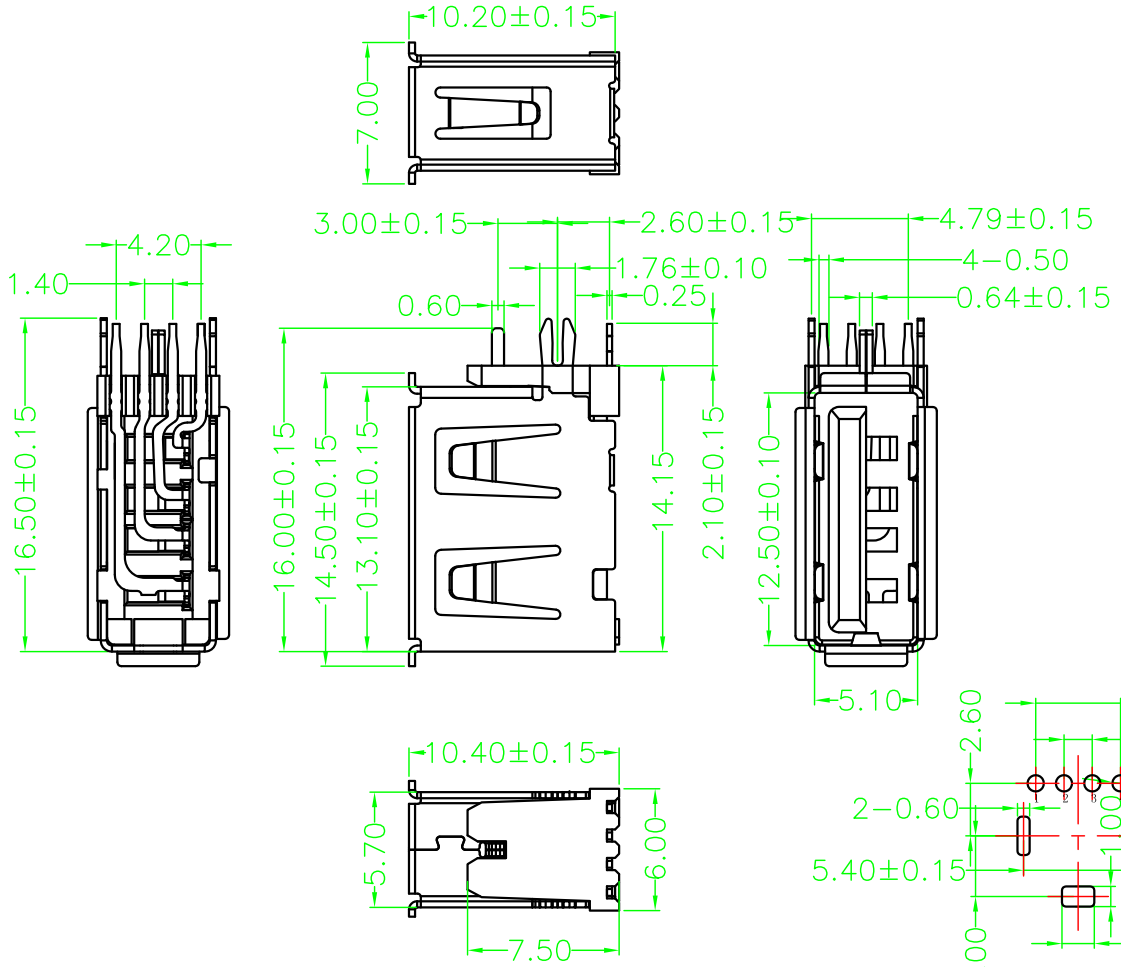

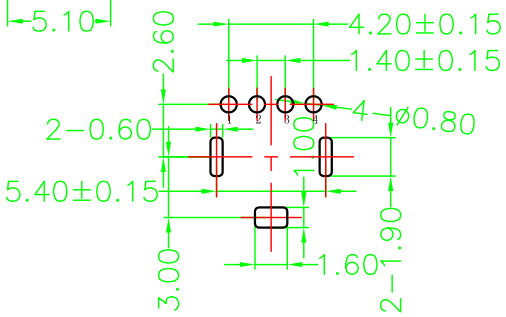

RECOMMENDED PCB LAYOUT

GENERAL TOLERANCES:±0.05

Note:

1.Material:

1.1,Housing: High temperature thermoplastic with/black G/F,UL94v-0

1.2,Contact: copper alloy,t=0.25mm

1.3,Shell: copper/Ferroalloy alloy,t=0.30mm

2.Specification:

2.1,Current rating:1.5A Max.

2.2,Dielectric withstanding voltage: 100 V(ac) for 1 min.

2.3,Contact resistance: 30 mΩ Max.

2.4,Insulation resistance: 100 MΩ Min.

2.5,Total mating force: 3.57 Kgf Max.

2.6,Total unmating force: 1.0 Kgf Min.

3.Plating:

3.1,Terminal: Au Plating on Contact Area
Sn Plating on Solder Area
Nickel Under plating All Over

Shell: Nickel Plating

4.Environmental:

4.1,Temperature range: -55°C~85°C

PART ON:

906-75XBXXX4D1XX

电镀规格：02,镀金1u″ 04,镀金3u″ 07,镀金15u″ 08,镀金30u″

端子材质：1,青铜 2,磷铜

端子规格：D,90度 Y,180度 S,SMT贴板

塑胶型态：1,14.0 2,13.65 3,14.0短路 4,10.0 5,10.0短路 6,10.0加胶1.4 7,1,4针 8,10.0加胶1.5

塑胶颜色：01,白色 02,黑色 03,本色

塑胶材质：1,PBT 2,LCP 3,PA9T 4,PPA 5,PA6T

对插方向：A,正向 B,反向

外壳材质：1,铁壳 2,铜壳

插口类型：5,有边 6,无边

外壳脚型：1,三直脚 2,三弯脚 3,外弯内直脚 4,外弯内O型脚 5,外直脚内O型脚 6,外直内弯脚 7,鱼叉内直脚 8,鱼叉内O型脚

类别：180° 系列

1	906-751B1014D102	5	
2		6	
3		7	
4		8	

DRAWN	JTJ 深圳市精拓金电子有限公司				
CHECKED	TITLE USB AF 10.0侧插反向 外鱼叉脚内直脚有边-H13.65	PART NO. SEE PART ON			
APPROVED		DRAWING NO. R906751B1014D102			
3rd ANGLE PROJECTION	UNIT mm	TOLERANCE .XXX±.10, .XX±.25, .X±.38, ANG±5°	SCALE 1:1	SHEET 1 OF 1	SIZE A4	REV. X1