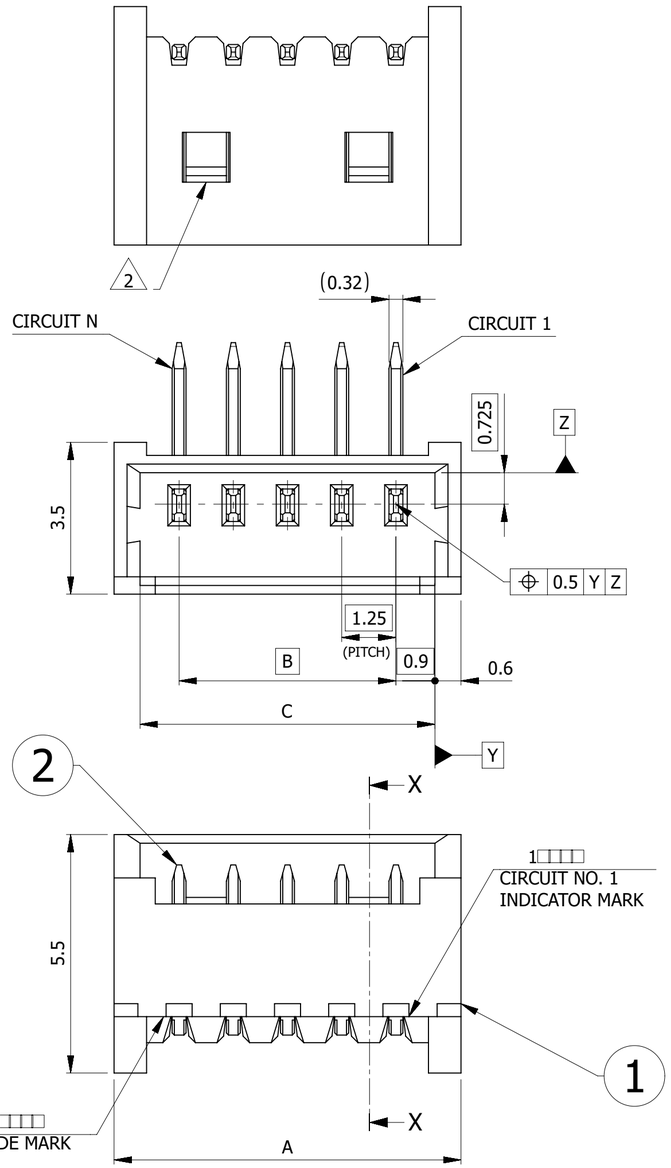

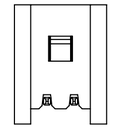

2, 3□□□ (1□□□)
FIGURE OF 2, 3 CIRCUIT (1 LOCK)

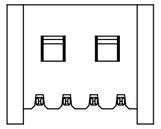

4~15□□□ (2□□□)
FIGURE OF 4-15 CIRCUIT (2 LOCKS)

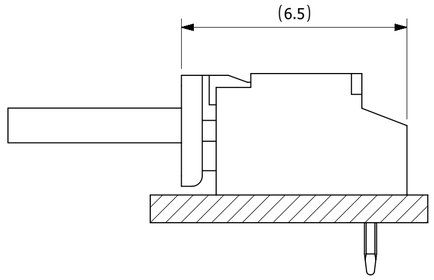

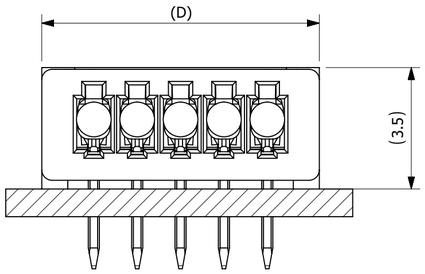

1 □□□ □□□ □□□□
MATED CONNECTORES

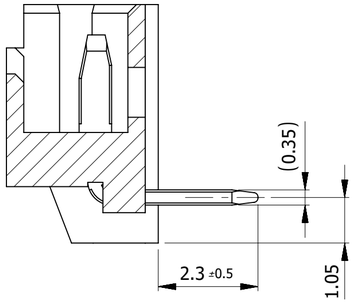

SECTION X-X

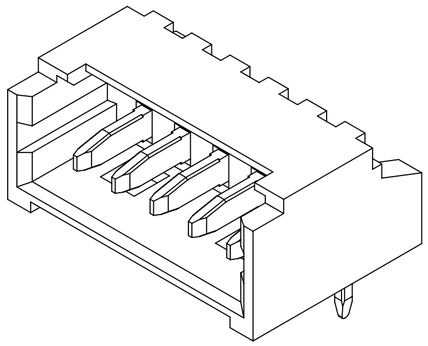

(□□□□□)
(NON-ACCUMULATE)

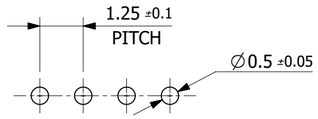

□□□□□□□□□ (t=0.8)
RECOMEENDED P.W.B HOLE DIMENSION (t=0.8)

□□ NOTES

1. □□□□□ MATE WITH:
   □□□□□□□: 51021 □□□□
   REC. HOUSING: 51021 SERIES
   □□□□□□□□□□□: 500588X00, 500798X00
   REC. CRIMP TERMINAL: 500588X00, 500798X00
2. □□□□ LOCKING WINDOW:
   □□□□□□2 3□□□1□□□4□□□□□2□□□□□□
   ONE PLACE FOR 2 AND 3 CIRCUIT.
   TWO PLACES FOR 4 CIRCUIT AND MORE.
   □□□□□□□□□□□TABLE1□□
3. MATERIAL AND PLATING: REFER TO TABLE1
4. □□□□□□□□□□□(□□□□□□□□□□) 510210000-AS
   APPLICATION SPECIFICATION (CONNECTOR MANUAL) : 510210000-AS
5. □□□□□□PS-51021-010
   □□PRODUCT SPECIFICATION : PS-51021-010
6. □□□□□: SPK-53048-001
   PACKAGING SPECIFICATION: SPK-53048-001
7. □□□□□□□□□□□□□□□□□□□□530480000-SD□□□□□□□□□
   THIS PRODUCT IS TIN PLATING TYPE.
   PLEASE REFER TO 530480000-SD FOR GOLD PLATING TYPE.
   □□□□
8. ORDER NO.

53048**10
□□
CIRCUIT

20.5	19.3	17.5	20.5	530481510	15
19.25	18.05	16.25	19.25	530481410	14
18	16.8	15	18	530481310	13
16.75	15.55	13.75	16.75	530481210	12
15.5	14.3	12.5	15.5	530481110	11
14.25	13.05	11.25	14.25	530481010	10
13	11.8	10	13	530480910	9
11.75	10.55	8.75	11.75	530480810	8
10.5	9.3	7.5	10.5	530480710	7
9.25	8.05	6.25	9.25	530480610	6
8	6.8	5	8	530480510	5
6.75	5.55	3.75	6.75	530480410	4
5.5	4.3	2.5	5.5	530480310	3
4.25	3.05	1.25	4.25	530480210	2
D	C	B	A	8 □□□□□□ ORDER NO. □□□□□□□□□□ PACKAGING: PLASTIC TRAY	□□ CIRCUIT

3 TABLE1

□□ NO.	□□ PART	□□ MATERIAL	
□	□□□□□ HOUSING	□□□□□(PA), UL94V-0, □□□□□□□ (□□□□) POLYAMIDE(PA), UL94V-0, COLOR□NATURAL (WHITE)	
□	□□□□□ TERMINAL	□□ MATERIAL	□□□□ PHOSPHOER BRONZE
		□□□□□□ CONTACT AREA	□□□□□□□ 0.9 MICRO-METER MIN. (□□□□□□□□□□□□) MATTE TIN PLATING 0.9 MICRO-METER MIN. (REFLOW TREATMENT, PRE-PLATING)
		□□□□ TAIL AREA	

DOCUMENT STATUS	P1	RELEASE DATE	2019/10/15 02:17:57

THIS DRAWING CONTAINS INFORMATION THAT IS PROPRIETARY TO MOLEX ELECTRONIC TECHNOLOGIES, LLC AND SHOULD NOT BE USED WITHOUT WRITTEN PERMISSION

DIMENSION UNITS	SCALE
mm	NTS

GENERAL TOLERANCES (UNLESS SPECIFIED)

ANGULAR TOL	±	3.0 °
4 PLACES	±	0.2
3 PLACES	±	0.2
2 PLACES	±	0.2
1 PLACE	±	0.2
0 PLACES	±	0.2

DRAFT WHERE APPLICABLE MUST REMAIN WITHIN DIMENSIONS

CURRENT REV DESC:

EC NO:	625372	
DRWN:	SOBARA01	2019/09/26
CHK'D:	KOMURAKAMI	2019/10/10
APPR:	AIDA	2019/10/15

INITIAL REVISION:

DRWN:	SOBARA01	2019/09/26
APPR:	AIDA	2019/10/15

molex

PICOBLADE 1.25
HEADER ASSY DIP R/A TIN PLATING TYPE

PRODUCT CUSTOMER DRAWING

DOCUMENT NUMBER	DOC TYPE	DOC PART	REVISION
530480001-SD	PSD	000	A

THIRD ANGLE PROJECTION	DRAWING	SERIES	MATERIAL NUMBER	CUSTOMER	SHEET NUMBER
	A2-SIZE	53048	SEE CHART	GENERAL	1 OF 1

FORMAT: 3D-PRODUCT-A2
REVISION: A
DATE: 2018/08/