环保物料

TEL:0769-82001899

Poles	DIM.A	DIM.B
2P	1.25	5.75
3P	2.50	7.00
4P	3.75	8.25
5P	5.00	9.50
6P	6.25	10.75
7P	7.50	12.00
8P	8.75	13.25
9P	10.00	14.50
10P	11.25	15.75
11P	12.50	17.00
12P	13.75	18.25
13P	15.00	19.50
14P	16.25	20.75
15P	17.50	22.00

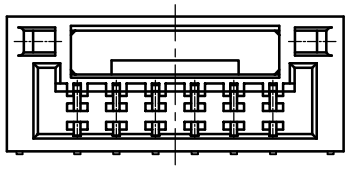

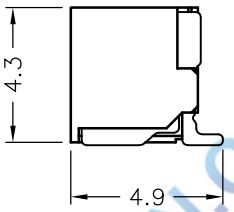

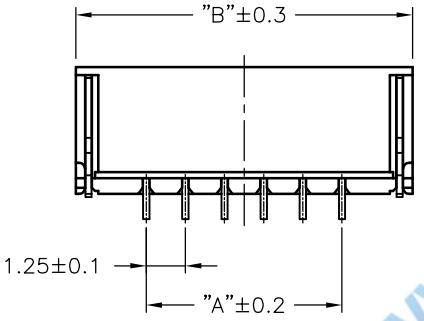

SPECIFICATIONS

1.Voltage rating: 50V AC, DC
2.Current rating: 1A, AC, DC
3.Withstanding Voltage: 500V AC/minute
4.Insulation resistance:100MΩ min
5.Temperature range: -25 ° C-+85 ° C
6.Contact resistance: 30mΩ max

WAFER
Housing Material: PA9T UL 94V0
Pin Material: Phosphor Bronze or Brass
Contact Area Plating: Plated Tin or Plated Gold
Mates with :P1257 series Housing
Poles:02-15P
Part No.: M1257RS-xx-9T-R

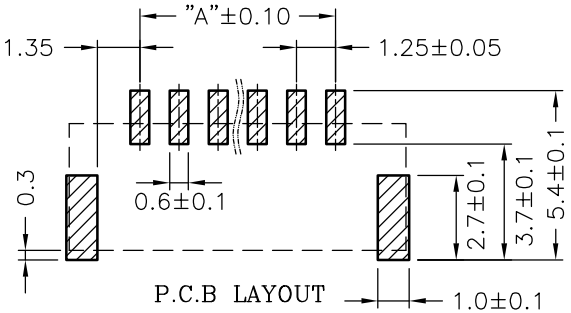

WWW.XFCONN.COM

VER	MODIFICATION	DRAW	DATE
A0			

TOLERANCE UNLESS OTHERWISE

X.	±0.30	X°	±5°
.X	±0.20	.X°	±2°
.XX	±0.08	.XX°	±1°
.XXX	±0.03	.XXX°	±0.5°

DRAWN	CK tan
CHKD	
APPD	
VIEW	

XFCN兴飞连接器有限公司
CONNECTORS XFCN CONNECTORS CO., LTD.

PRODUCT NAME	1.25mm Crimp Style Connectors
PART. NO.	M1257RS-xx-9T-R

SHEET	1/1
DATE	2010. 4. 12
UNITS	mm
SCALE	1:1
DWG NO.	009