SPECIFICATIONS
Rated Current:3.0AMP
Contact Resistance:20mΩ Max
Withstand Voltage:1000V AC/DC
Insulation Resistance:1000MΩ Min
Operation Temperature:-40°c to +105°c

Contact Material:Brass
Contact Plating:Au Over Ni
Insulator Material:Polyester(UL94V-0)
Standard: PBT
Max.Processing Temp: 180°C for 30-60 seconds
(200°C for 10 seconds)

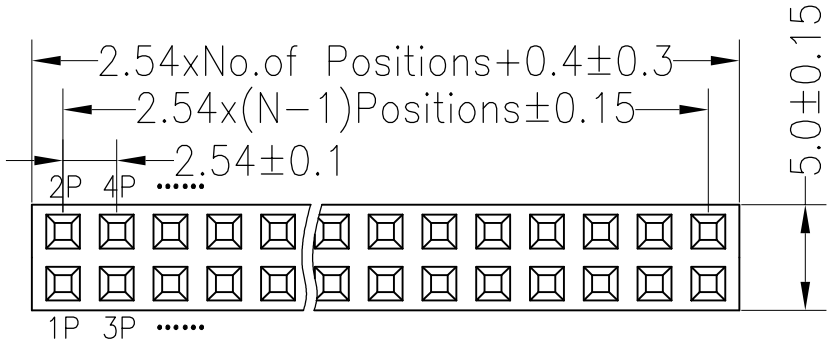

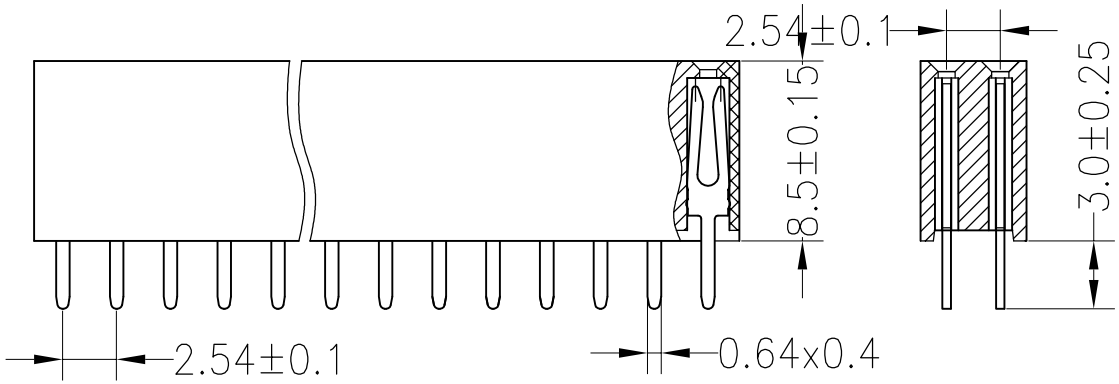

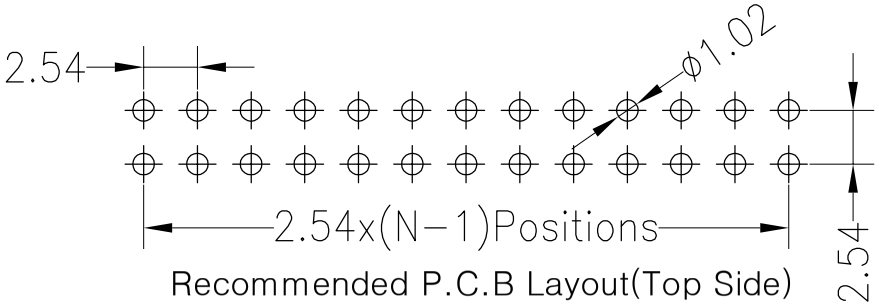

Recommended P.C.B Layout(Top Side)
(PCB BOARD TOLERANCE±0.05)

REV	DATE	MODIFICATION DESCRIPTION	CHANGE
A0	2012.03.28	NEW DRAWING	

OPERATION	
X.X	±0.30
X.XX	±0.20
X.XXX	±0.10
Angle	±3°
DIM	TOL

DRAW
CHECK
APPROVE

SCALE	FIT
UNIT	mm
SIZE	A4
SHEET	1/1
PROJ.	

深圳市连盛精密连接器有限公司

PART NO. FH-00088

TITLE: 2.54FH H8.5mm 2x10pin 180° W5.0mm