REV.	LOCAS.	DESCRIPTION	DATE	DRAWN
04	04	依業務要求修改電氣特性	2019.01.08	何東華
05	05	依業務要求修改電氣特性	2021.04.29	何東華

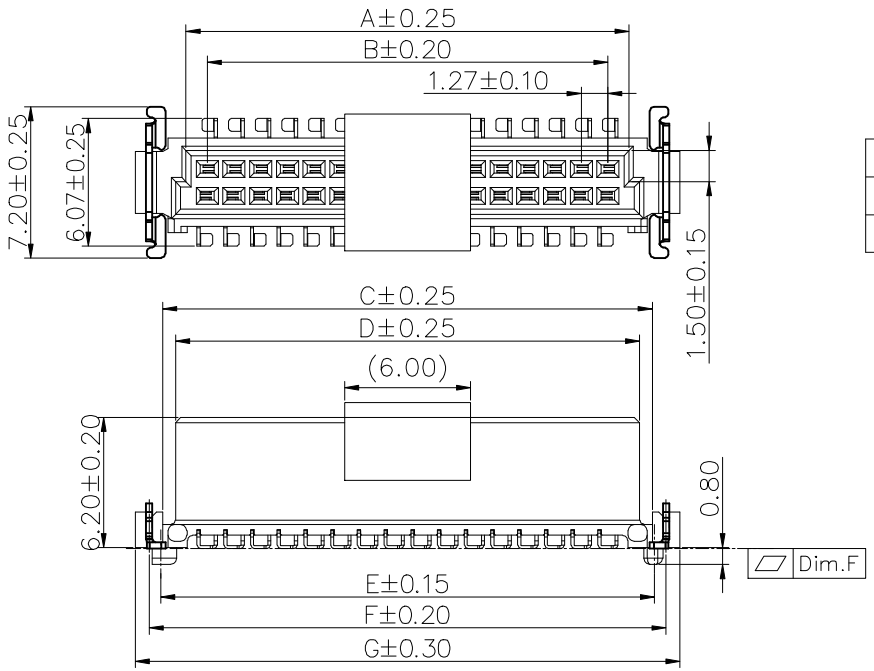

Pin No.	Dim.F
≤25pin	0.12
>25pin	0.15

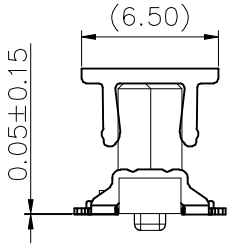

04 Specifications
Current Rating: 1.70Amp/PIN 05
Insulation Resistance: 10000MΩMin.
Dielectric Withstanding Voltage: 500VAC
Contact Resistance: 25mΩ Max.
Operating Temperature: −55°C to +125°C
Materials
Contact Material: Phosphor Bronze
Insulator Material: High Temperature Thermoplastic, UL 94V−0 LCP or the equivalent material
All materials must meet GREENCONN hazardous substances control standards.

No. of PIN/ROW	Dimension Information							
	A	B	C	D	E	F	G	H
2x06	8.37	6.35	10.57	9.37	10.77	11.87	13.20	10.10
2x08	10.91	8.89	13.11	11.91	13.31	14.41	15.74	12.64
2x10	13.45	11.43	15.65	14.45	15.85	16.95	18.28	15.18
2x13	17.26	15.24	19.46	18.26	19.66	20.76	22.09	18.99
2x16	21.07	19.05	23.27	22.07	23.47	24.57	25.90	22.80
2x20	26.15	24.13	28.35	27.15	28.55	29.65	30.98	27.88
2x25	32.50	30.48	34.70	33.50	34.90	36.00	37.33	34.23
2x34	43.93	41.91	46.13	44.93	46.33	47.43	48.76	45.66
2x40	51.55	49.53	53.75	52.55	53.95	55.05	56.38	53.28

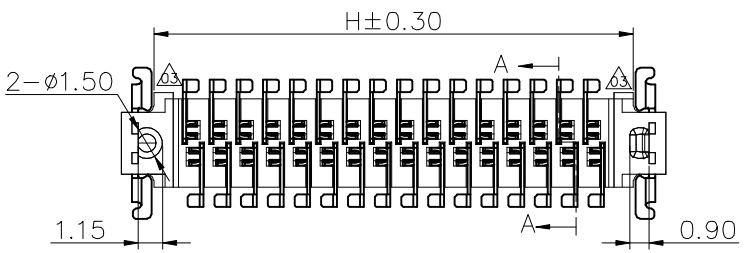

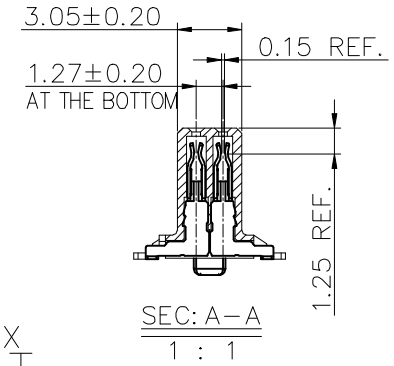

Recommended P.C.Board Layout
(Tolerance: ±0.05)

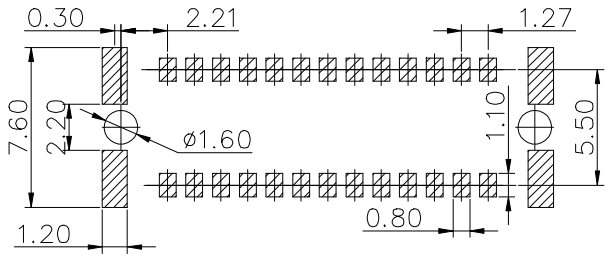

Ordering Information

C BEC201− XX XX B 004 C 1 T X

- No. of Pins per Row: 06,08,10,13,16, 20,25,34,40
- Standard Plating: 79=5u"Au/80~160u"Matte Tin
  Selective Plating: 52=5u"Au/80~160u" Tin
  02 01=Tin
- Color: 1=Black
- Standard Packing: F=Cap+Tape&Reel
  Selective Packing: C=Tube

Greenconn Website: www.greenconn.com E−mail: sales@greenconn.com	3RD.ANG PROJ.	GENERAL TOLERANCE X.°±5.0° / X.±0.30 .X°±3.0° / .X±0.25 .XX°±2.0° / .XX±0.15 .XXX°±1.0° / .XXX±0.10	DESIGNED: 何東華 / DATE: 2021.04.29 CHECKED: / DATE: APPROVED: / DATE:	DWG. NO. CBEC201−CB4CT PART NO. CBEC201−XXXX B004C1TX	TITLE. 1.27 BOARD TO BOARD FEMALE DUAL ROW SMT TYPE CONNECTOR
REV. 05 / UNIT. mm / SCALE. 3:1	PAGE. 1/1				