RoHS

CAD GENERATED DRAWING. DON'T CHANGE BY HAND.

REV.	ECN. NO.	APPD.

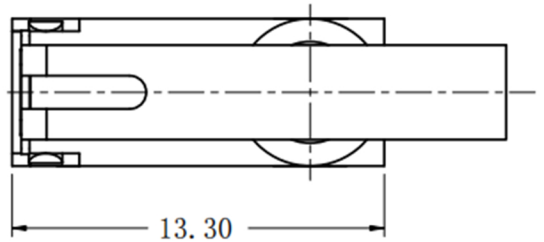

Circuit Diagram

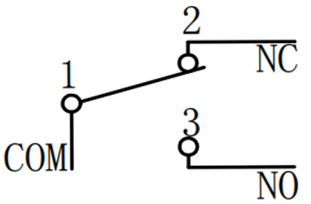

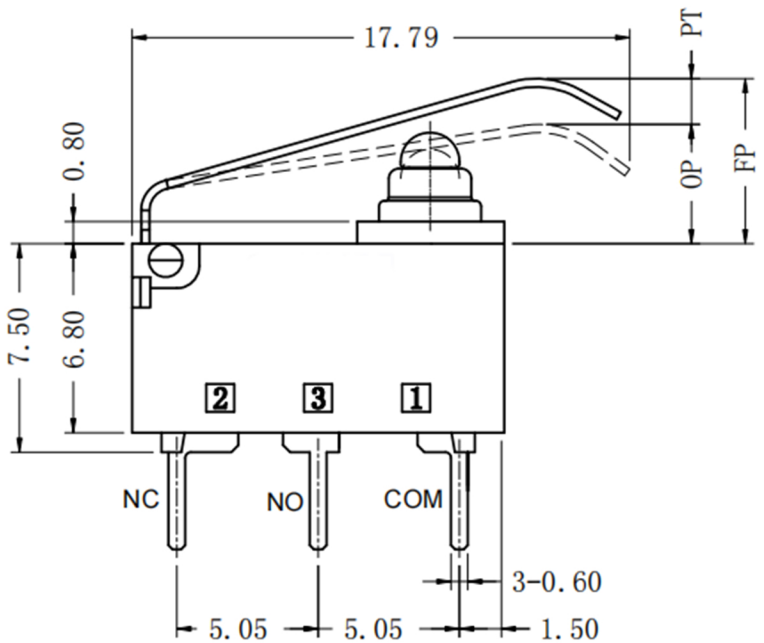

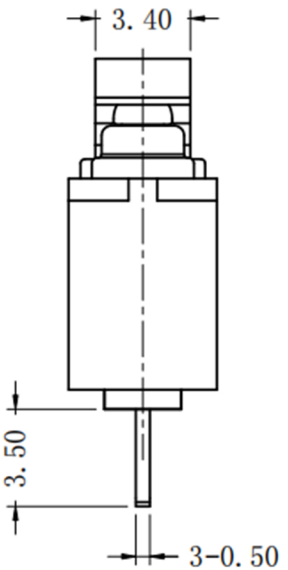

CHARACTERISITICS	
Operating Force:	250gf Max.
Release Force:	35gf Min.
Operation Position:	4.30±1.00mm
Pre Travel:	3.50mm Max.
Differential Travel:	0.60mm Max.
Over Travel:	1.30mm Min.

ELECTRICAL DATA		
CONTACT ARRANGEMENT	SWITCH SEALING	TERMINALS
S.P.D.T	IP67	IP00
Ratings		
0.1A 48VDC 125/250VAC 3A 12VDC μ40T85 1E5		

X.	±0.50	X.°	±2°
.X	±0.30	.X°	±1°
.XX	±0.10	.XX°	±0.5°
.XXX	±0.05		

UNITS mm

MAT'L

FINISH

Q'TY

THESE DRAWINGS AND SPECIFICATIONS ARE THE PROPERTY OF YIYUAN TECHNOLOGY CO.,LTD AND SHALL NOT BE REPROOUCED. COPIED OR USED IN ANY MANNER WITHOUT THE PRIOR WRITTEN CONSENT OF YIYUAN TECHNOLOGY CO.,LTD

yi YUAN 深圳市怡远科技有限公司 SHENZHEN YIYUAN TECHNOLOGY CO.,LTD

PART NO. YTD-303-130P09

TITLE: DETECT SWITCH

APPD: ROGER

CHKD: ROC

DR: BILLY WANG 2020/08/21

DWG NO.: YTD-303-130P09

SCALE	SHEET	REV.
1/1	1/1	A1