ROHS

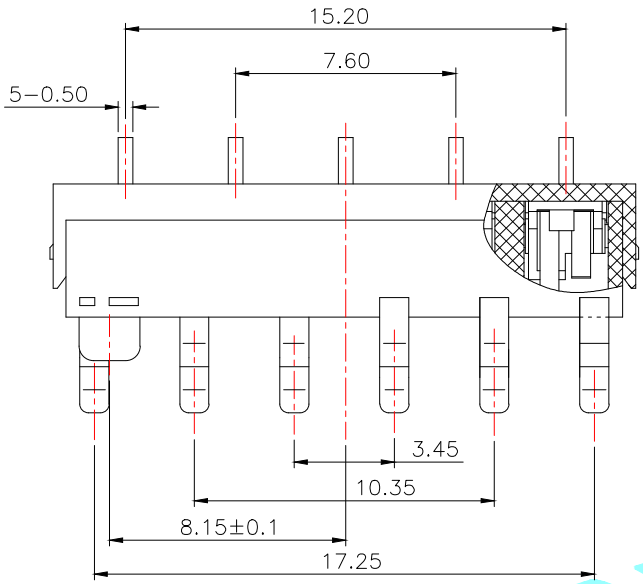

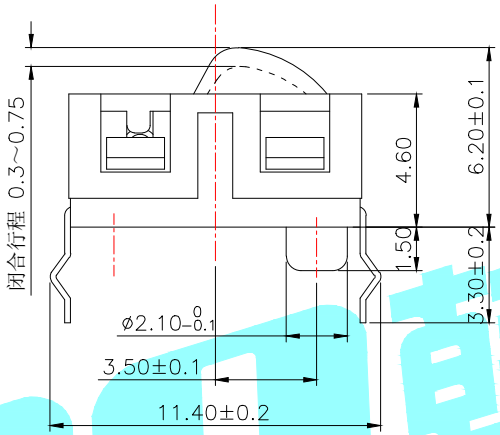

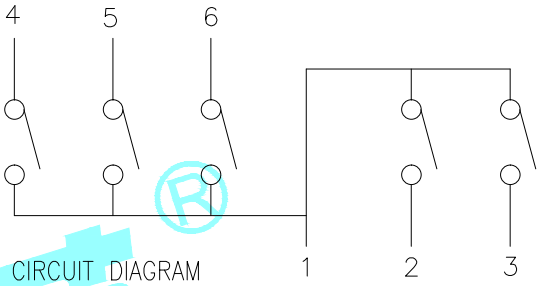

CIRCUIT DIAGRAM

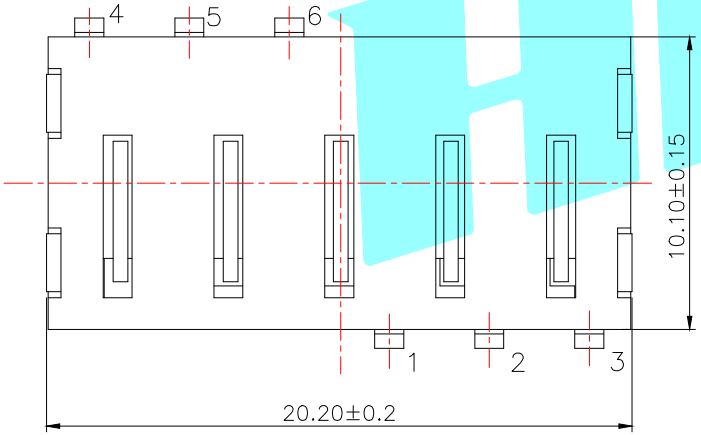

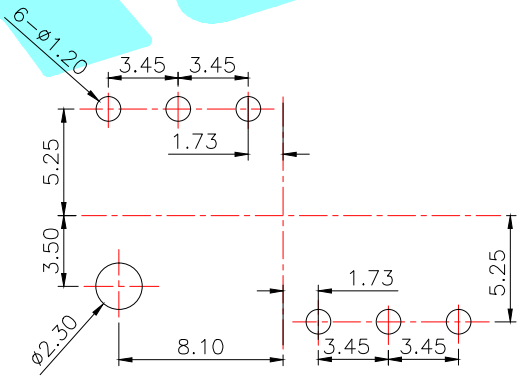

PCB LAND DIMENSION

NOTE:
1.Rating: DC 16V 1A.
2.Dielectric withstanding : AC 500V for 1minute.
3.Contact resistance : 100mΩ Max.
4.Insulation Resistance : 50mΩ Min.
5.Operating Force: 25gf±10gf.
6.Mechanical Life: 30000 CYCLES.

ITEM	PART NAME	TER'NO.	QTY.	MATERIAL	FINISHING	REMARK
⑤	Spring	——	5	Phosphor bronze	Plating silver	——
④	Terminal	——	6	Brass	Plating silver	——
③	Knob	——	5	POM	White	——
②	Cover	——	1	POM	Black	——
①	Base	——	1	Nylon	Black	——

APPROVALS		DATE	HRO韩荣® ELECTRONICS CO.,LTD				
DRAWN	LIUCAN	2021.08.20					
CHECKED			TITLE:	PUSHBUTTON SWITCHS			
APPROVALS			PART NO.	K5−2010DA−01			
TOLERANCES ARE	30~以上 ±0.30 10~30 ±0.20 5~10 ±0.15 ~ 5 ±0.10	ANGLE ±2°	UNIT: mm	SCALE: 1:1	PROJ:		
			DRAWING NO.	——	SHEET 1 OF 1		

ECN NO.	REV.	DATE.	DESCRIPTION.	CHANGE.	CHECK.	APPRO.
——	A	——	NEW	——	——	——