Customer Information Sheet

DRAWING No.: M20-999XXXX	IF IN DOUBT - ASK	©	NOT TO SCALE	THIRD ANGLE PROJECTION	ALL DIMENSIONS IN mm

NOTES:
1. RECOMMENDED PCB MOUNTING HOLE SIZE = Ø1.02±0.05mm.
2. ALL TOLERANCES ARE ±0.25mm UNLESS OTHERWISE STATED.
3. FOR COMPLETE SPECIFICATION, SEE COMPONENT SPECIFICATION C001XX (LATEST ISSUE).

Active products:

M20-99902XX
M20-99903XX
M20-99904XX
M20-99905XX
M20-99906XX
M20-99907XX
M20-99908XX
M20-99909XX
M20-99910XX
M20-99912XX
M20-99913XX
M20-99914XX
M20-9991546
M20-99916XX
M20-9991846
M20-99920XX
M20-9992545
M20-99930XX
M20-9993245
M20-99936XX
M20-99940XX

SPECIFICATION:
MATERIAL:
MOULDING = PA6T UL94V-0, BLACK
PINS = BRASS
FINISH:
PINS (OVER NICKEL):
45 = GOLD
46 = 100% TIN
ELECTRICAL:
CURRENT RATING = 3A MAX
CONTACT RESISTANCE = 20mΩ MAX
INSULATION RESISTANCE = 1,000MΩ MIN
DIELECTRIC STRENGTH = 500V AC
MECHANICAL:
DURABILITY = 300 OPERATIONS (GOLD),
50 OPERATIONS (TIN)
ENVIRONMENTAL:
TEMPERATURE RANGE = -40°C TO +105°C
PACKING:
BAG

OBSOLETE
All other size/finish combinations not listed above

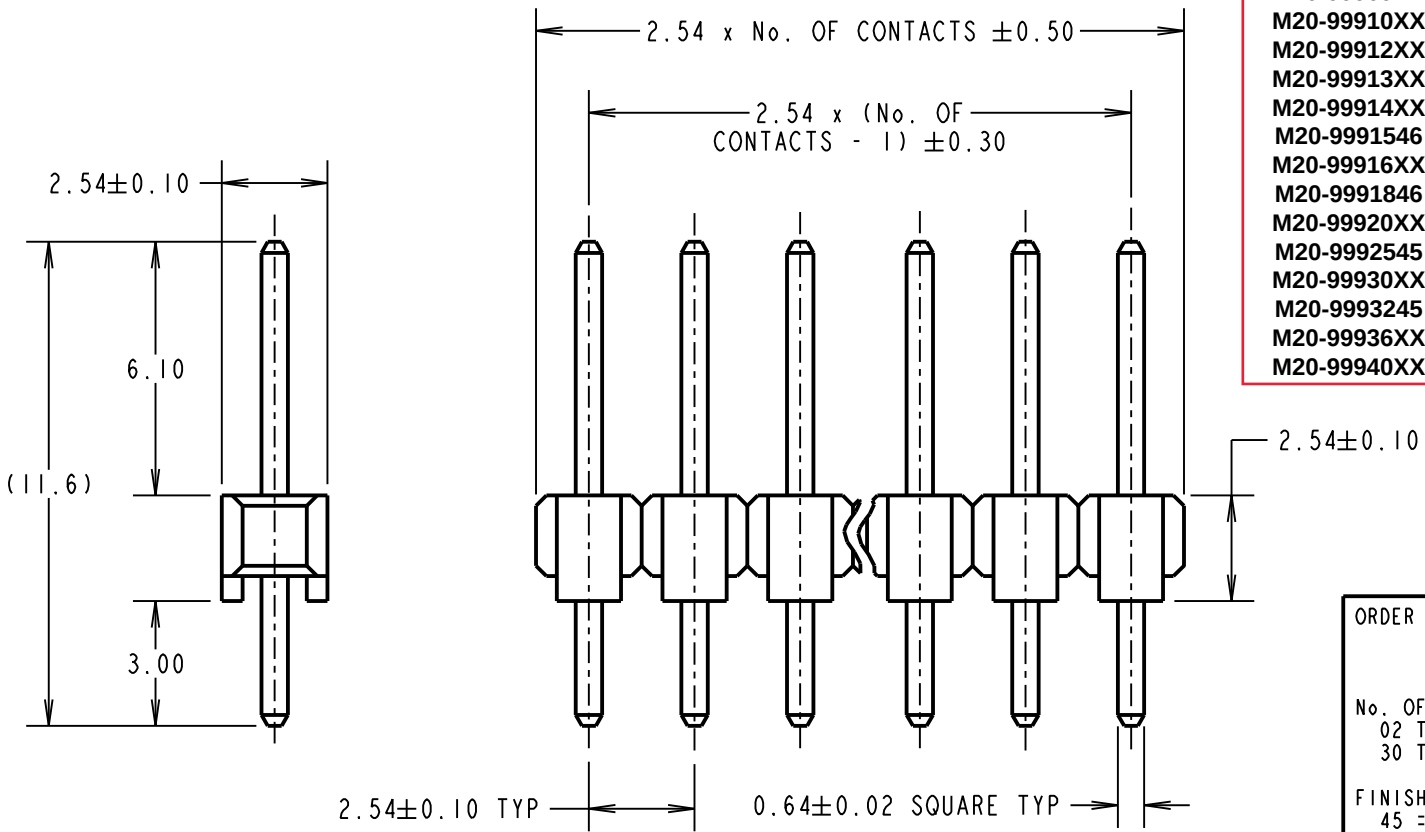

ORDER CODE:
M20-999XXXX
No. OF CONTACTS:
02 TO 20, 23, 25,
30 TO 33, 36, 40
FINISH:
45 = GOLD
46 = 100% TIN

NAME	ISS.	DATE	C/NOTE
MGP	23	17.12.18	21677

APPROVED: MGP
CHECKED: SB
DRAWN: P. ALEXANDER
CUSTOMER REF.:
ASSEMBLY DRG:

HARWIN
www.harwin.com
technical@harwin.com

THIS DRAWING AND ANY INFORMATION OR DESCRIPTIVE MATTER SET OUT HEREON ARE CONFIDENTIAL AND COPYRIGHT PROPERTY OF THE HARWIN GROUP AND MUST NOT BE DISCLOSED, LOANED, COPIED OR USED FOR MANUFACTURING, TENDERING OR FOR ANY OTHER PURPOSE WITHOUT THEIR WRITTEN PERMISSION.

TOLERANCES
~~X. = ±1mm~~
~~X.X = ±0.50mm~~
~~X.XX = ±0.10mm~~
~~X.XXX = ±0.01mm~~
ANGLES = ±5°
UNLESS STATED

MATERIAL: SEE ABOVE
FINISH: SEE ABOVE
S/AREA: mm²

TITLE: 2.54mm PITCH SIL VERTICAL PC TAIL PIN HEADER ASSEMBLY

DRAWING NUMBER: M20-999XXXX

SHT 2 OF 2