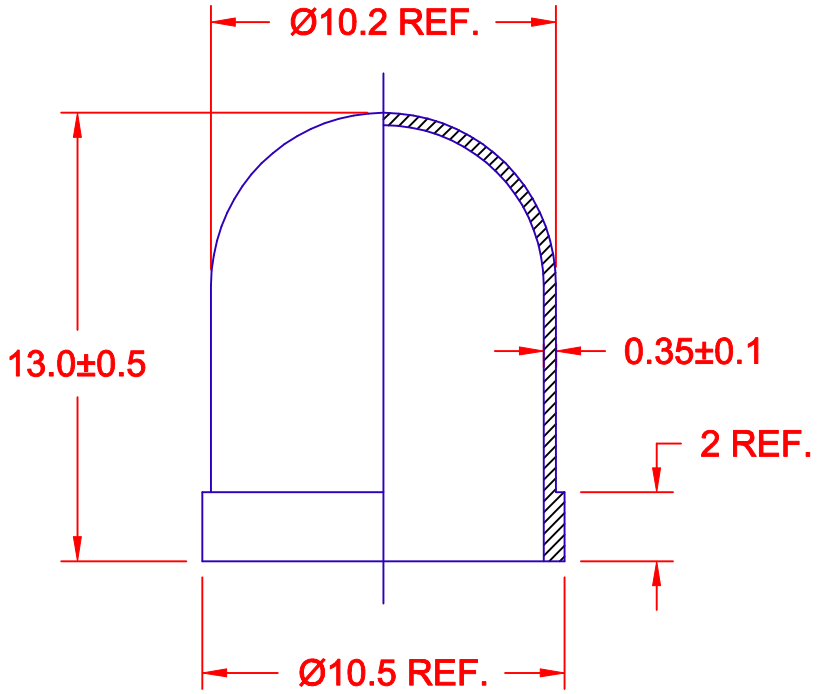

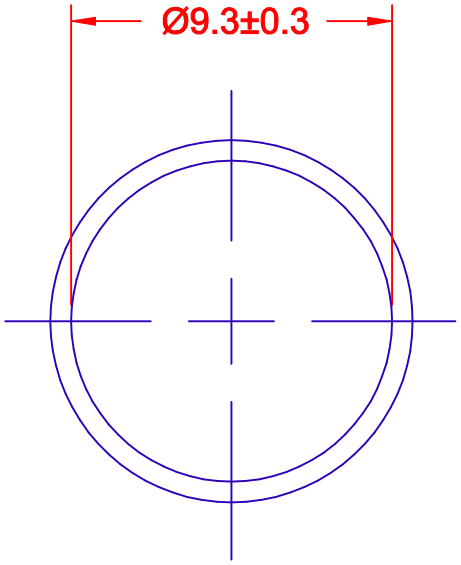

JKL PART NUMBER	COLOR
39-12-1*	RED
39-12-2*	ORANGE
39-12-3*	YELLOW
39-12-4*	GREEN
39-12-5*	BLUE
39-12-6*	BLUE-WHITE
39-12-7*	WHITE

*TO BE DETERMINED

REV. NO.	DESCRIPTION/ECO NUMBER	APPV'D DATE
	RELEASED	1/16/01

METRIC
THIRD ANGLE PROJECTION

DIMENSIONS ARE IN MILLIMETERS
TOLERANCE UNLESS OTHERWISE SPECIFIED
1 PL +/- 0.2
2 PL +/- 0.20
ANGLE +/-

JKL COMPONENTS CORPORATION

TITLE: T-3 1/4 LAMP FILTER

DRAWN BY	APPV'D BY	DATE	SIZE	FSCM NO.	DRAWING NO.
L. WENGSTROM	ED	1/16/01	A	55335	FILTER 39-12

- CAD DRAWING -
MANUAL REVISIONS NOT PERMITTED

SCALE	RELEASED DATE	REVISION DATE	REV. NO.	SHEET
NONE	1/16/01			1 OF 1