Oct.1.2022 Copyright 2022 HIROSE ELECTRIC CO., LTD. All Rights Reserved.
In case of consideration for using Automotive equipment / device which demand high reliability, kindly contact our sales window correspondents.

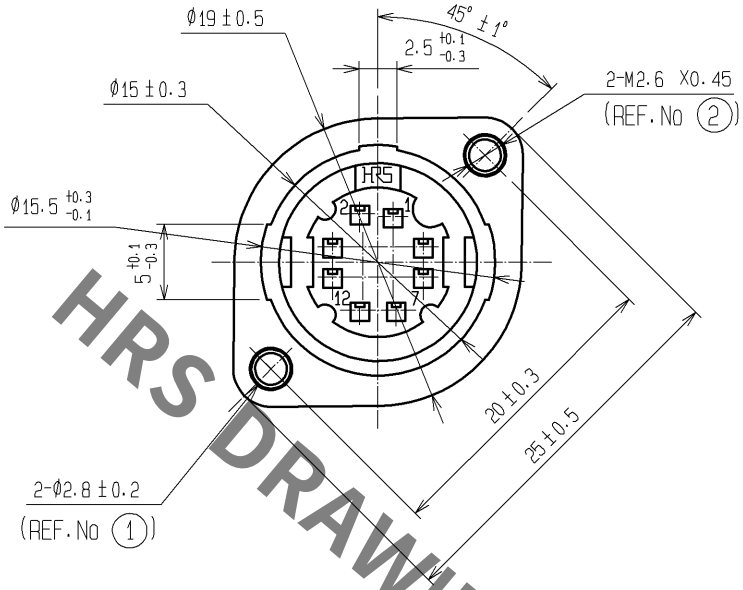

RECOMMENDED PC BOARD PATTERN
(MOUNTING SIDE)

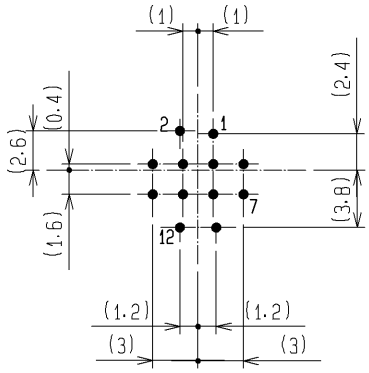

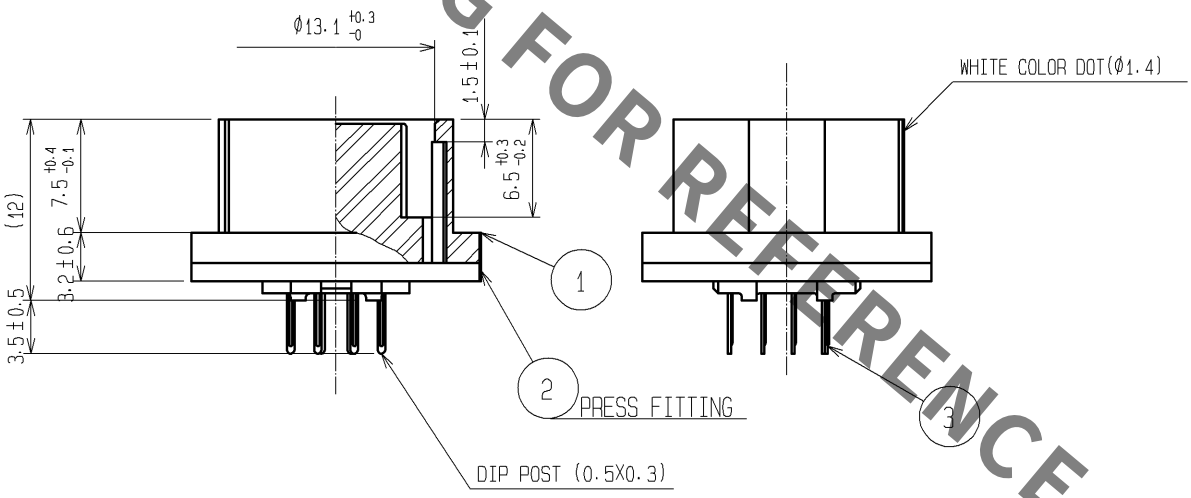

HRS DRAWING FOR REFERENCE

NO.	MATERIAL	FINISH . REMARKS	NO.	MATERIAL	FINISH . REMARKS
2	STEEL	NICKEL PLATING			
1	POLYCARBONATE	(BLACK) UL94V-0	3	PHOSPHOR BRONZE	SILVER PLATING 0.8μm min.

UNITS mm	SCALE 1 : 1	COUNT	DESCRIPTION OF REVISIONS	DESIGNED	CHECKED	DATE

HIROSE ELECTRIC CO., LTD.

APPROVED	: MO. SATOH	09.01.16	DRAWING NO.	EDC4-021079-71
CHECKED	: HY. KOBAYASHI	09.01.16	PART NO.	RP17-13RA-12SD(71)
DESIGNED	: TH. KAMEYA	09.01.16		
DRAWN	: HK. NAMAI	09.01.15	CODE NO.	CL113-0511-4-71 △ 1/1

FORM HC0011-5-51