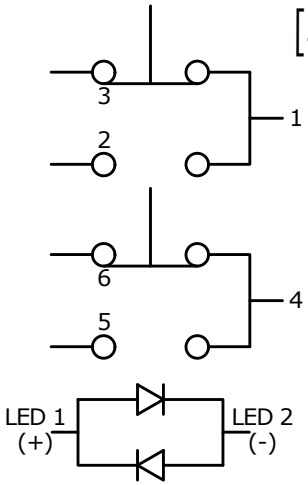

SCHEMATIC
▲ ON - ON
DPDT Illuminated

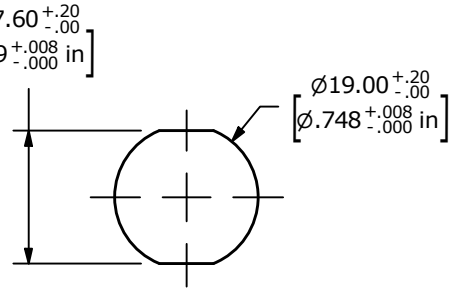

PANEL CUT-OUT
PANEL THICKNESS 1-10mm

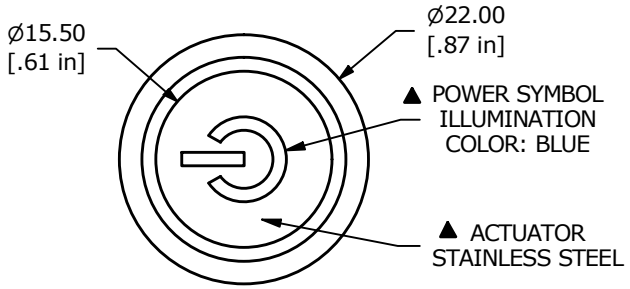

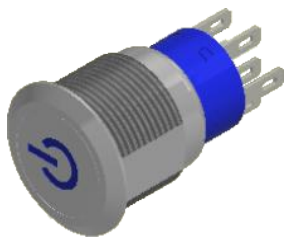

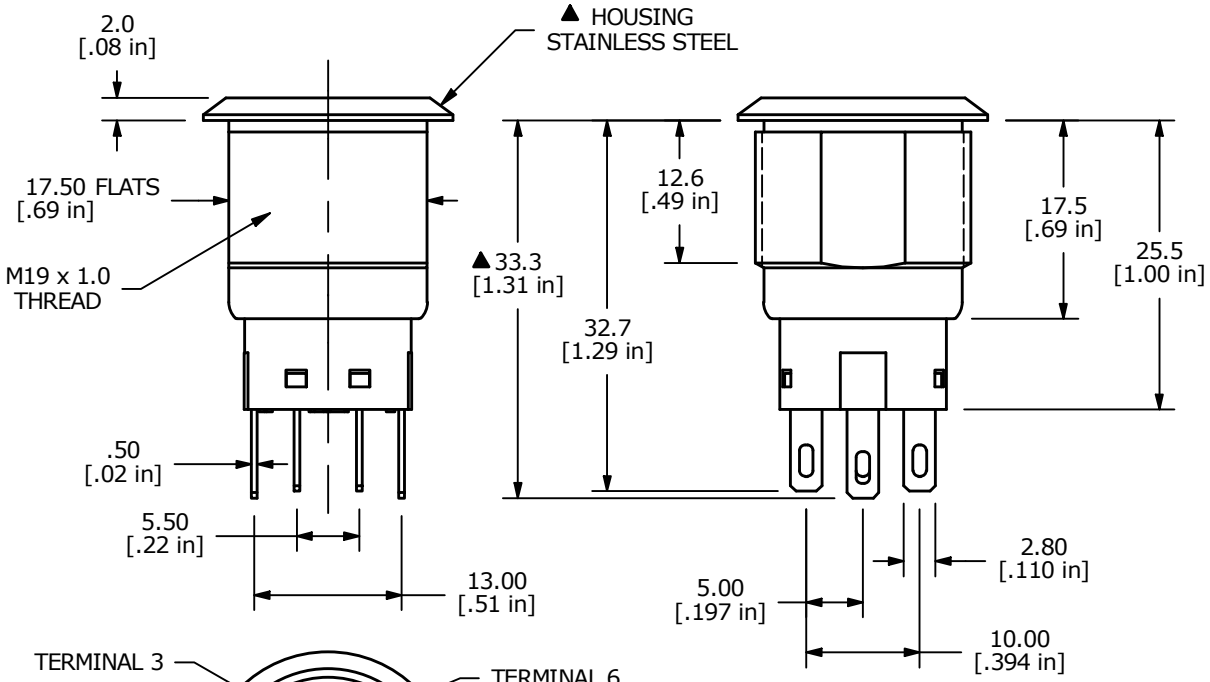

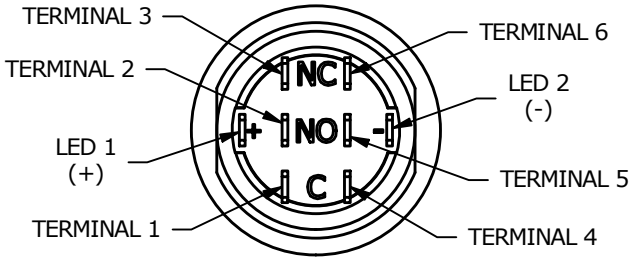

NOTE:
1. ALL DIMENSIONS IN MM [INCH]
2. GENERAL TOLERANCE: X.X = ±0.4
   X.XX = ±0.25
3. TERMINAL NUMBERS FOR REF ONLY
▲ 4. CONTACT MATERIAL: SILVER
5. RATING: 3A 250 VAC cUL
6. ELECTRIC LIFE: 50,000 MAKE-AND-BREAK CYCLES AT FULL LOAD.
7. MECHANICAL LIFE: 500,000 CYCLES.
8. INSULATION RESISTANCE: 1,000 MΩ @ 500VDC MIN.
9. DIELECTRIC STRENGTH: 2,000 VAC MIN. FOR 1 MINUTE
10. CONTACT RESISTANCE: 50mΩ MAX. @ 1A 12VDC
11. OPERATING TEMP.: -20°C to 55°C
12. ▲ DENOTES CRITICAL PARAMETER.
▲ 13. LAMP VOLTAGE: 20mA 24V
14. TRAVEL: 3.2mm
15. ACTUATION FORCE: 3.5 ± 1.0 N
16. MOUNTING NUT TORQUE: 5-14 Nm
17. INGRESS PROTECTION: IP67, IK10
18. HARDWARE SUPPLIED: O-RING AND HEXNUT

REV	ECO NO	DESCRIPTION	DATE	BY
B	ECO-100337	UPDATE PANEL CUTOUT	12/09/21	JS

THE INFORMATION CONTAINED IN THIS DOCUMENT IS PROPRIETARY TO E-SWITCH AND IS NOT TO BE COPIED OR TRANSFERRED

E·SWITCH®

OBJECT ID 000026061

TITLE ULV4F2GSS545

SCALE	DATE	DR	DWG	REV
3:2	5/23/2016	MW	T940060	B