NCV890201GEVB

NCV890201 Automotive Grade High-Frequency Buck Regulator Evaluation Board User's Manual

ON Semiconductor®

http://onsemi.com

EVAL BOARD USER'S MANUAL

Description

The NCV890201 demonstration board provides a convenient way to evaluate a high-frequency buck converter design. No additional components are required, other than dc supplies for the input and enable voltages. An external clock can be used to synchronize the switching frequency; and the board also provides a synchronization output, enabling it to be used as a master. It is configured for a 3.3 V output with a 2 MHz switching frequency and a 2.0 A maximum output current, over the typical 4.5 V to 18 V automotive input voltage range. In addition, the board regulates up to 36 V thanks to switching frequency foldback.

Key Features

- 3.3 V Output Voltage
- 2 MHz Switching Frequency
- 2.0 A Current Limit
- Wide Input Voltage of 4.5 V to 36 V
- Regulates through Load Dump Conditions
- External Clock Synchronization up to 2.5 MHz
- Synchronization Output
- Automotive Grade

Figure 1. NCV890201GEVB Board Picture

© Semiconductor Components Industries, LLC, 2011

December, 2011 – Rev. P1

Publication Order Number:
EVBUM2050/D

Table 1. DEMONSTRATION BOARD TERMINALS

Terminal	Function
VIN	Positive dc input voltage
GND	Common dc return
VOUT	Regulated dc output voltage
EN	Enable input
SYNCI	Input for external clock synchronization
SYNCO	Output for synchronizing other boards

Table 2. ABSOLUTE MAXIMUM RATINGS
(Voltages are with respect to GND)

Rating	Value	Units
Dc supply voltage (VIN, EN)	-0.3 to 36 V	V
Dc supply voltage (SYNCI)	-0.3 to 6 V	V
Junction Temperature (NCV890201)	-40 to 150	°C
Ambient temperature (Demo Board)	-40 to 85	°C

Stresses exceeding Maximum Ratings may damage the device. Maximum Ratings are stress ratings only. Functional operation above the Recommended Operating Conditions is not implied. Extended exposure to stresses above the Recommended Operating Conditions may affect device reliability.

Table 3. ELECTRICAL CHARACTERISTICS
(T_A = 25°C, 4.5 V ≤ V_{IN} ≤ 40 V, V_{EN} = 2 V, V_{OUT} = 3.3 V, 0 ≤ I_{OUT} ≤ 2.0 A, unless otherwise specified)

Characteristics	Conditions	Typical Value	Units
Regulation			
Output Voltage		3.30	V
Voltage Accuracy		4	%
Line Regulation	I_{OUT} = 1.0 A	0.12	%
Load Regulation	V_{IN} = 13.2 V	0.03	%
Switching			
Switching Frequency		2.0	MHz
Soft-start Time		1.4	ms
SYNCI Frequency range		1.8 to 2.5	MHz
Current Limit			
Average Current Limit	V_{IN} = 6 to 18 V	1.8	A
Cycle-by-cycle Current Limit		2.45	A
Protections			
Input Undervoltage Lockout (UVLO)	V_{IN} decreasing	4.2	V
Thermal Shutdown	T_A increasing	170	°C

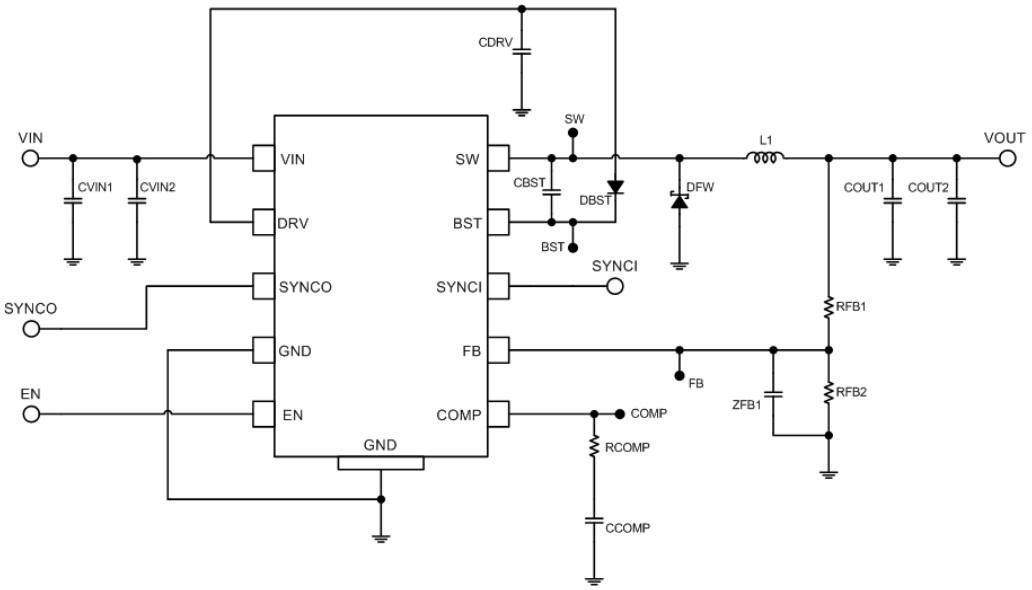

Figure 2. NCV890201GEVB Board Schematic

Operational Guidelines

1. Connect a dc input voltage, within the 4.5 V to 36 V range, between VIN and GND
2. Connect a load between VOUT and GND
3. Connect a dc enable voltage, within the 4.5 V to 36 V range, between EN and GND
4. Optionally, for external clock synchronization, connect a pulse source between SYNCI and GND. The high state level should be within the 2 to 6 V range, and the low state level within the -0.3 V to 0.8 V range, with a minimum pulse width of 40 ns and a frequency within the 1.8 to 2.5 MHz range.

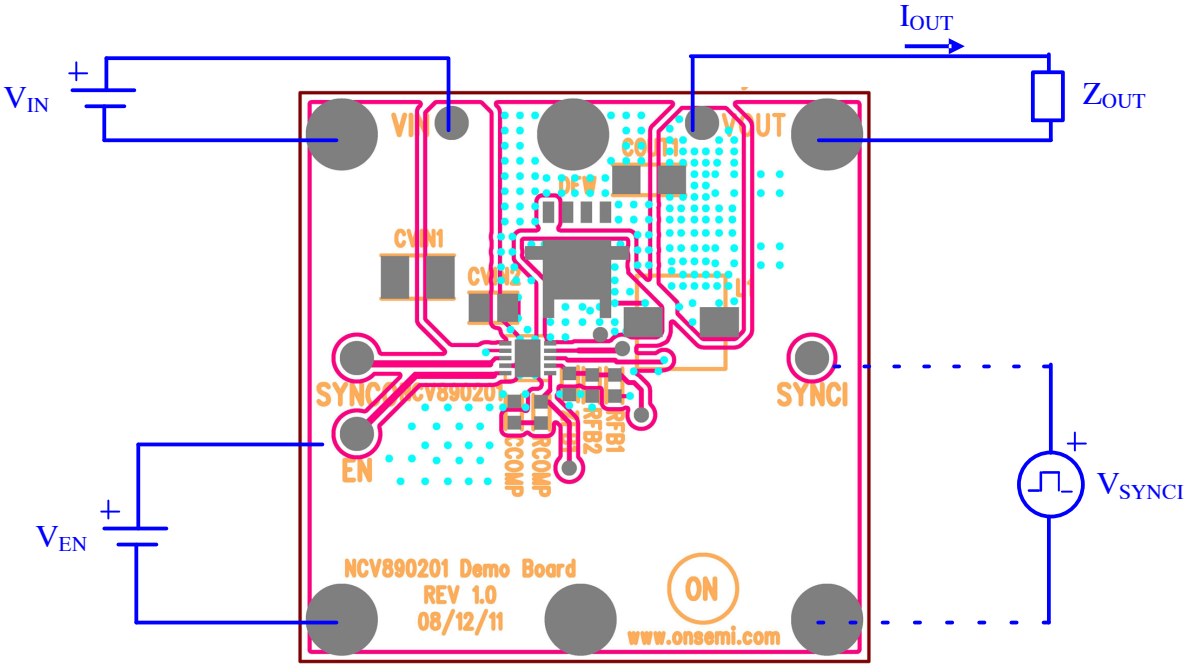

Figure 3. NCV890201GEVB Board Connections

TYPICAL PERFORMANCE

Efficiency

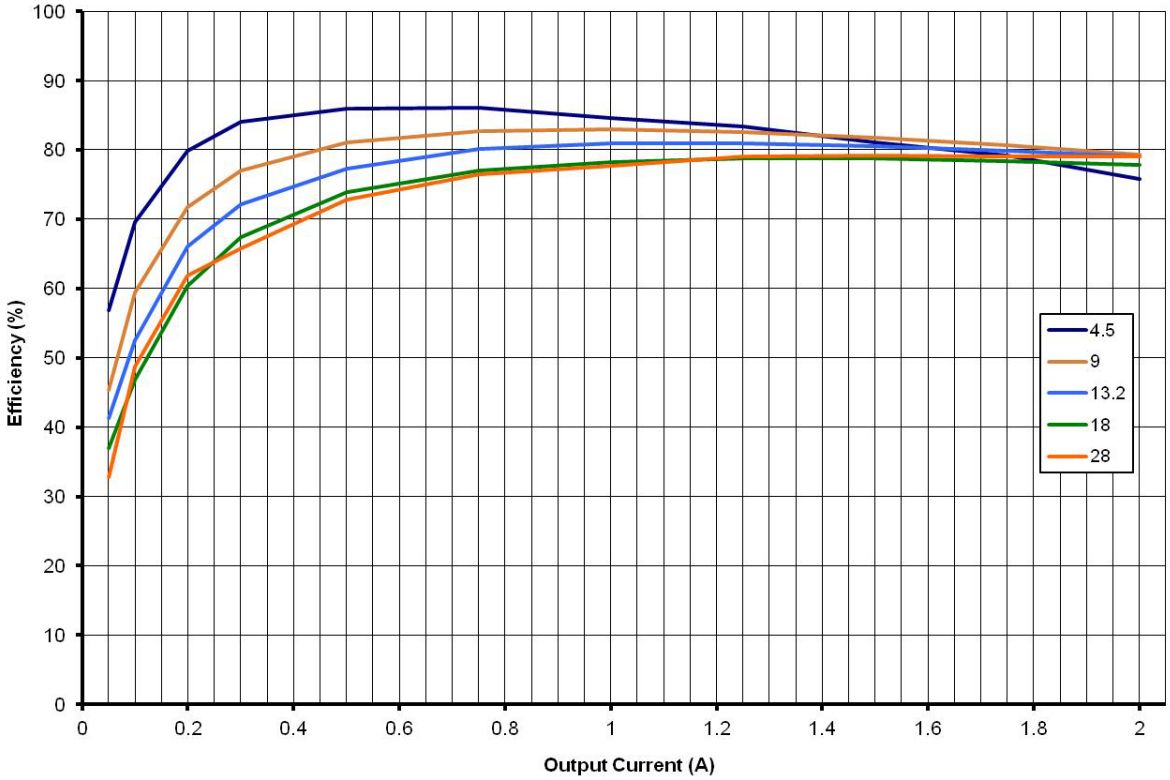

Figure 4. Efficiency at 2 MHz for a 3.3 V output

Start−up

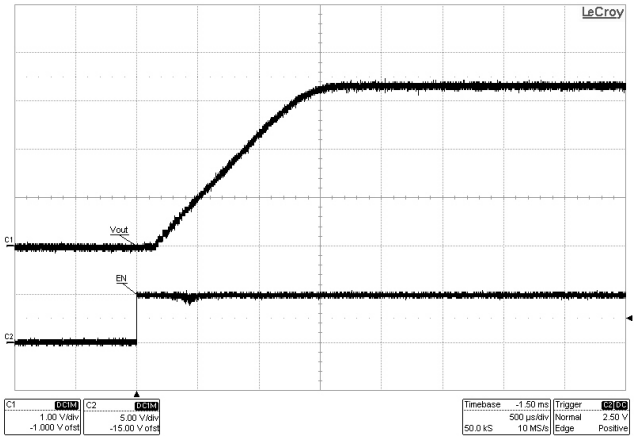

Figure 5. Typical start−up with V_{IN} = 13.2 V, V_{OUT} = 3.3 V and I_{OUT} = 0.2 A

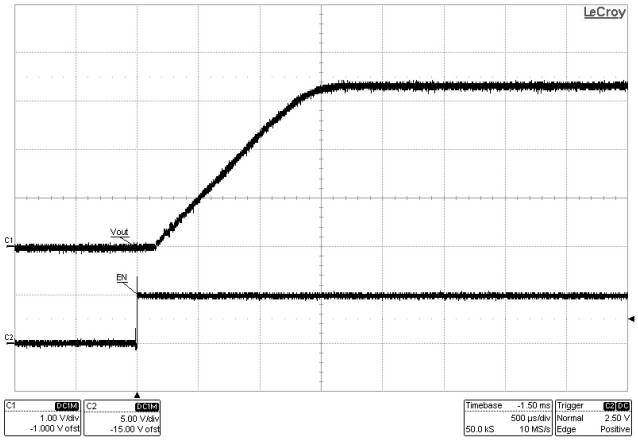

Figure 6. Typical start−up with V_{IN} = 13.2 V, V_{OUT} = 3.3 V and I_{OUT} = 1.8 A

Load Transients

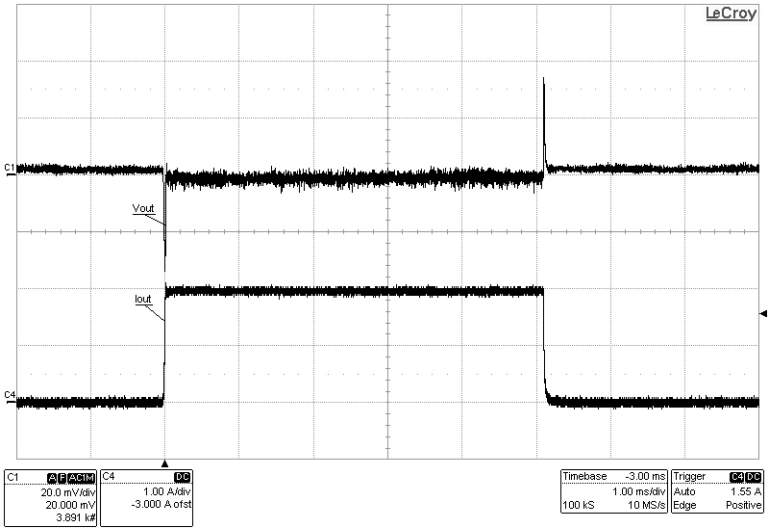

Figure 7. Load transient 0.1 A to 2.0 A, with V_{OUT} = 3.3 V and V_{IN} = 13.2 V

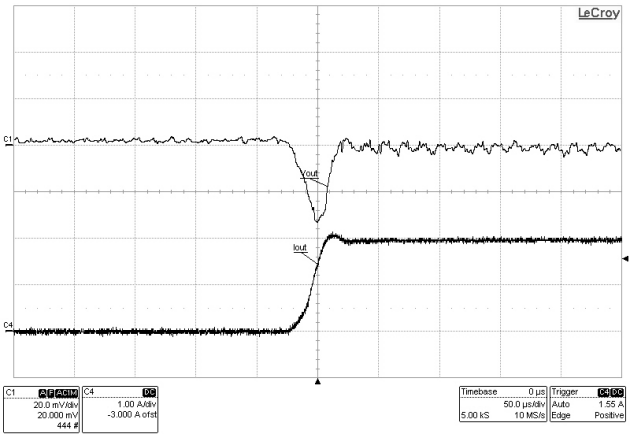

Figure 8. Load transient 0.2 A to 2.0 A, with V_{OUT} = 3.3 V and V_{IN} = 13.2 V

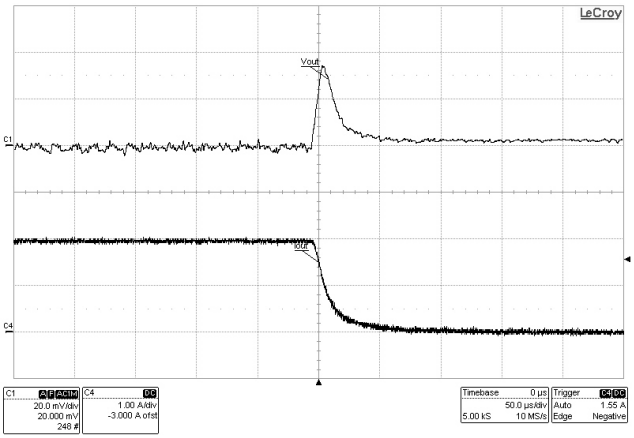

Figure 9. Load transient 2.0 A to 0.2 A, with V_{OUT} = 3.3 V and V_{IN} = 13.2 V

Synchronization

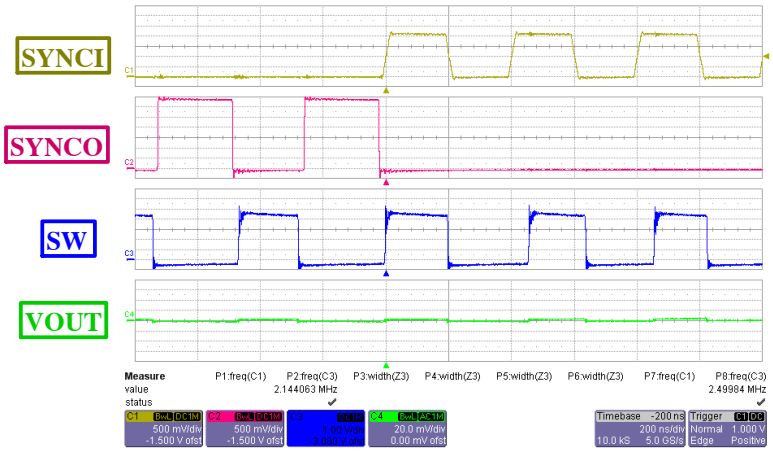

Figure 10. Starting synchronization at 2.5 MHz (from free−running)

Minimum on time

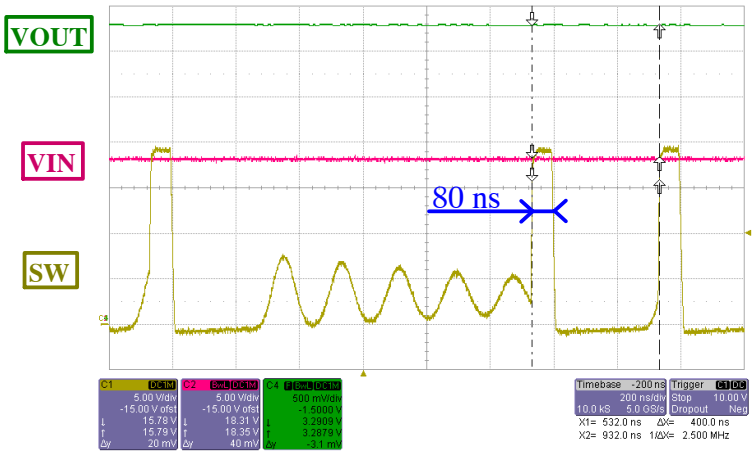

Figure 11. Minimum on time seen during a load transient

Schematic

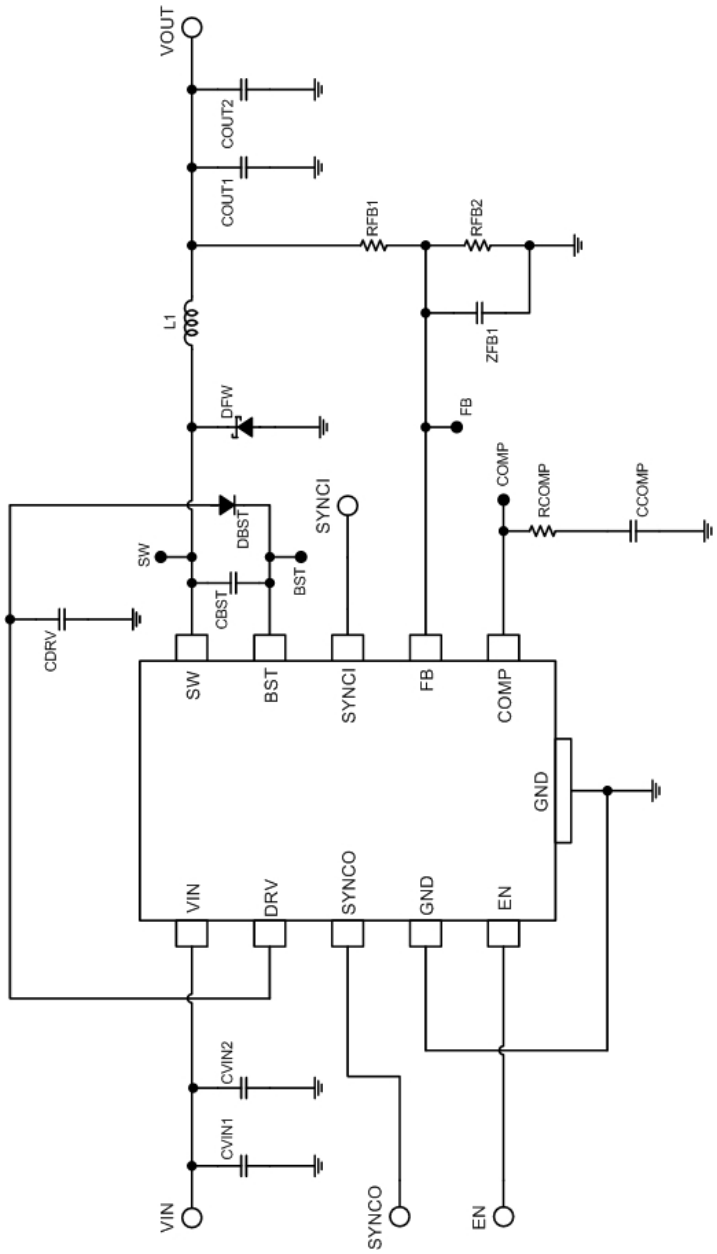
VOUT
COUT2
COUT1
L1
DFW
SW
DBST
CBST
BST
CDRV
RFB1
RFB2
ZFB1
FB
SYNCI
COMP
RCOMP
CCOMP
SW
BST
SYNCI
FB
COMP
GND
VIN
DRV
SYNCO
GND
EN
CVIN2
CVIN1
VIN
SYNCO
EN

PCB LAYOUT

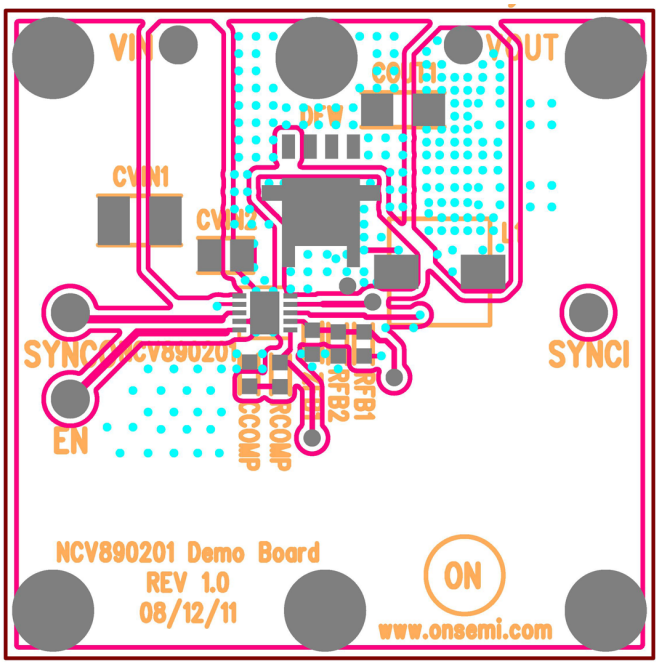

Figure 12. Top View

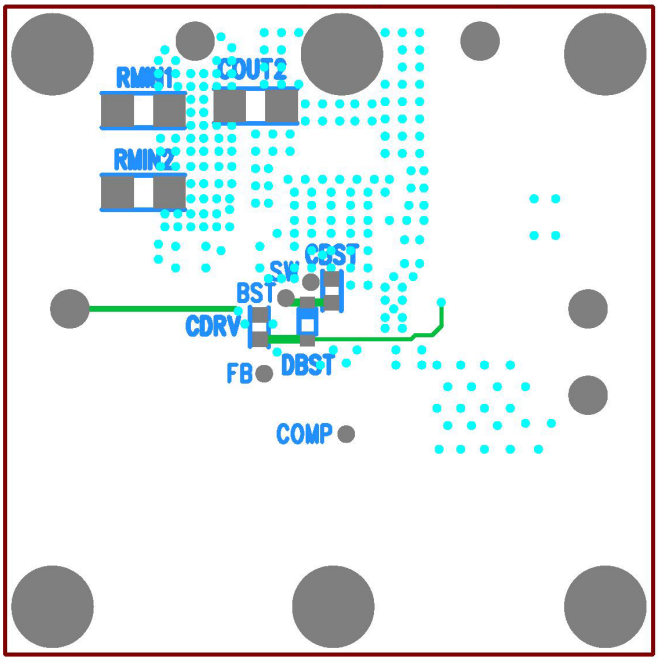

Figure 13. Bottom View

Table 4. BILL OF MATERIALS

Reference	Value	Part #	Manufacturer	Description	Package
U1		NCV890201	ON Semiconductor	Integrated circuit	3x3 DFN10
L1	4.7 μH	7447786004	Wurth	Inductor	WE-PD-XS
DFW		MBR340MFS	ON Semiconductor	Diode, Schottky, 1.5A, 40V	SMB
DBST		BAS16HT1	ON Semiconductor	Diode, Switching, 200mA, 75V	SOD-323
CVIN1	4.7 μF		Murata	Capacitor, Ceramic, 50V, X7R	1210
CVIN2	1 μF		Murata	Capacitor, Ceramic, 50V, X5R	0805
CDRV, CBST	0.1 μF		Kemet	Capacitor, Ceramic, 10V, X7R	0603
ZFB1	4.7 nF		Murata	Capacitor, Ceramic, 50V, X7R	0603
COUT1, COUT2	10 μF		Murata	Capacitor, Ceramic, 10V, X7R	1206
CCOMP	330 pF		Murata	Capacitor, Ceramic, 50V, C0G	0603
RCOMP	12.4 KΩ		Vishay	Resistor, 1%	0603
RFB1	100 Ω		Vishay	Resistor, 1%	0603
RFB2	31.6 Ω		Vishay	Resistor, 1%	0603

onsemi, onsemi, and other names, marks, and brands are registered and/or common law trademarks of Semiconductor Components Industries, LLC dba "**onsemi**" or its affiliates and/or subsidiaries in the United States and/or other countries. **onsemi** owns the rights to a number of patents, trademarks, copyrights, trade secrets, and other intellectual property. A listing of **onsemi**'s product/patent coverage may be accessed at www.onsemi.com/site/pdf/Patent−Marking.pdf. **onsemi** is an Equal Opportunity/Affirmative Action Employer. This literature is subject to all applicable copyright laws and is not for resale in any manner.

The evaluation board/kit (research and development board/kit) (hereinafter the "board") is not a finished product and is not available for sale to consumers. The board is only intended for research, development, demonstration and evaluation purposes and will only be used in laboratory/development areas by persons with an engineering/technical training and familiar with the risks associated with handling electrical/mechanical components, systems and subsystems. This person assumes full responsibility/liability for proper and safe handling. Any other use, resale or redistribution for any other purpose is strictly prohibited.

THE BOARD IS PROVIDED BY ONSEMI TO YOU "AS IS" AND WITHOUT ANY REPRESENTATIONS OR WARRANTIES WHATSOEVER. WITHOUT LIMITING THE FOREGOING, ONSEMI (AND ITS LICENSORS/SUPPLIERS) HEREBY DISCLAIMS ANY AND ALL REPRESENTATIONS AND WARRANTIES IN RELATION TO THE BOARD, ANY MODIFICATIONS, OR THIS AGREEMENT, WHETHER EXPRESS, IMPLIED, STATUTORY OR OTHERWISE, INCLUDING WITHOUT LIMITATION ANY AND ALL REPRESENTATIONS AND WARRANTIES OF MERCHANTABILITY, FITNESS FOR A PARTICULAR PURPOSE, TITLE, NON−INFRINGEMENT, AND THOSE ARISING FROM A COURSE OF DEALING, TRADE USAGE, TRADE CUSTOM OR TRADE PRACTICE.

onsemi reserves the right to make changes without further notice to any board.

You are responsible for determining whether the board will be suitable for your intended use or application or will achieve your intended results. Prior to using or distributing any systems that have been evaluated, designed or tested using the board, you agree to test and validate your design to confirm the functionality for your application. Any technical, applications or design information or advice, quality characterization, reliability data or other services provided by **onsemi** shall not constitute any representation or warranty by **onsemi**, and no additional obligations or liabilities shall arise from **onsemi** having provided such information or services.

onsemi products including the boards are not designed, intended, or authorized for use in life support systems, or any FDA Class 3 medical devices or medical devices with a similar or equivalent classification in a foreign jurisdiction, or any devices intended for implantation in the human body. You agree to indemnify, defend and hold harmless **onsemi**, its directors, officers, employees, representatives, agents, subsidiaries, affiliates, distributors, and assigns, against any and all liabilities, losses, costs, damages, judgments, and expenses, arising out of any claim, demand, investigation, lawsuit, regulatory action or cause of action arising out of or associated with any unauthorized use, even if such claim alleges that **onsemi** was negligent regarding the design or manufacture of any products and/or the board.

This evaluation board/kit does not fall within the scope of the European Union directives regarding electromagnetic compatibility, restricted substances (RoHS), recycling (WEEE), FCC, CE or UL, and may not meet the technical requirements of these or other related directives.

FCC WARNING − This evaluation board/kit is intended for use for engineering development, demonstration, or evaluation purposes only and is not considered by **onsemi** to be a finished end product fit for general consumer use. It may generate, use, or radiate radio frequency energy and has not been tested for compliance with the limits of computing devices pursuant to part 15 of FCC rules, which are designed to provide reasonable protection against radio frequency interference. Operation of this equipment may cause interference with radio communications, in which case the user shall be responsible, at its expense, to take whatever measures may be required to correct this interference.

onsemi does not convey any license under its patent rights nor the rights of others.

LIMITATIONS OF LIABILITY: **onsemi** shall not be liable for any special, consequential, incidental, indirect or punitive damages, including, but not limited to the costs of requalification, delay, loss of profits or goodwill, arising out of or in connection with the board, even if **onsemi** is advised of the possibility of such damages. In no event shall **onsemi**'s aggregate liability from any obligation arising out of or in connection with the board, under any theory of liability, exceed the purchase price paid for the board, if any.

The board is provided to you subject to the license and other terms per **onsemi**'s standard terms and conditions of sale. For more information and documentation, please visit www.onsemi.com.

PUBLICATION ORDERING INFORMATION

LITERATURE FULFILLMENT:
Email Requests to: orderlit@onsemi.com

onsemi Website: www.onsemi.com

TECHNICAL SUPPORT
North American Technical Support:
Voice Mail: 1 800−282−9855 Toll Free USA/Canada
Phone: 011 421 33 790 2910

Europe, Middle East and Africa Technical Support:
Phone: 00421 33 790 2910
For additional information, please contact your local Sales Representative

◊