Part Number: 0731712730
Status: Active
Overview: BNC Miniature RF Connectors and Cable Assemblies
Description: 75 Ohms, Mini-BNC, Straight Jack, Nickel

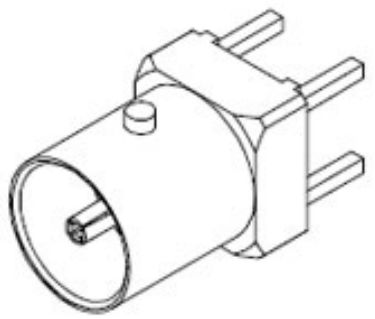

Series image - Reference only

Documents:
Drawing (PDF)
RoHS Certificate of Compliance (PDF)

General	
Product Family	RF/Coax Connectors
Series	73171
Overview	BNC Miniature RF Connectors and Cable Assemblies
Product Name	Mini-BNC
Style	PCB
Taxonomy	RF / Coaxial Connectors
Type	Subminiature
UPC	800756697819
Wire/Cable Type	N/A
Physical	
Gender	Jack
Keying to Mating Part	Yes
Net Weight	2.389/g
Orientation	Straight
PCB Mounting	Through Hole
PCB Thickness - Recommended	3.81mm
Packaging Type	Tray
Panel Mount	No
Panel Mount Method	N/A
Reverse Polar	No
Electrical	
Frequency	3 GHz
Impedance	75Ω
Power / Voltage	VOLTAGE: 300 Vrms@Sea Level
Solder Process Data	
Duration at Max. Process Temperature (seconds)	005
Lead-freeProcess Capability	SMC&WAVE
Max. Cycles at Max. Process Temperature	002
Process Temperature max. C	260
Material Info	
Reference - Drawing Numbers	
Sales Drawing	SD-73171-273-001

EU ELV
Not Relevant

EU RoHS
Compliant with Exemption 6(c)

China RoHS

REACH SVHC
Contained Per - D(2022)4187-DC (10 June 2022)

Lead
Halogen-Free Status
Low-Halogen

For more information, please visit Contact US

China ROHS	50 Image
ELV	Not Relevant
RoHS Phthalates	Not Contained

Search Parts in this Series
73171 Series