PART NO.	TYPE	A DIA ±.016	B DIA ±.016	C DIA ±.016	D ±.016	E RADIUS ±.016	F RADIUS ±.016	G RADIUS ±.016	MS NUMBER
10-35910- 3	II	.130	.210	.379	2.875	.031	.031	.031	MS3420- 3
- 4		.220	.302	.505	2.750	.031	.031	.031	- 4
- 6		.312	.427	.619	2.625	.031	.031	.031	- 6
- 8		.437	.552	.744	2.500	.062	.062	.062	- 8
-10		.562	.615	.889	2.375				-10
-12		.625	.740	1.084	2.250				-12
-16		.750	.927	1.314	2.125				-16
-20		.937	1.240	1.598	2.000				-20
-24		1.250	1.365	1.874	1.875				-24
-28		1.375	1.614	2.085	1.750				-28
-32		1.624	1.864	2.335	1.625				-32
-40		1.874	2.364	2.835	1.500				-40

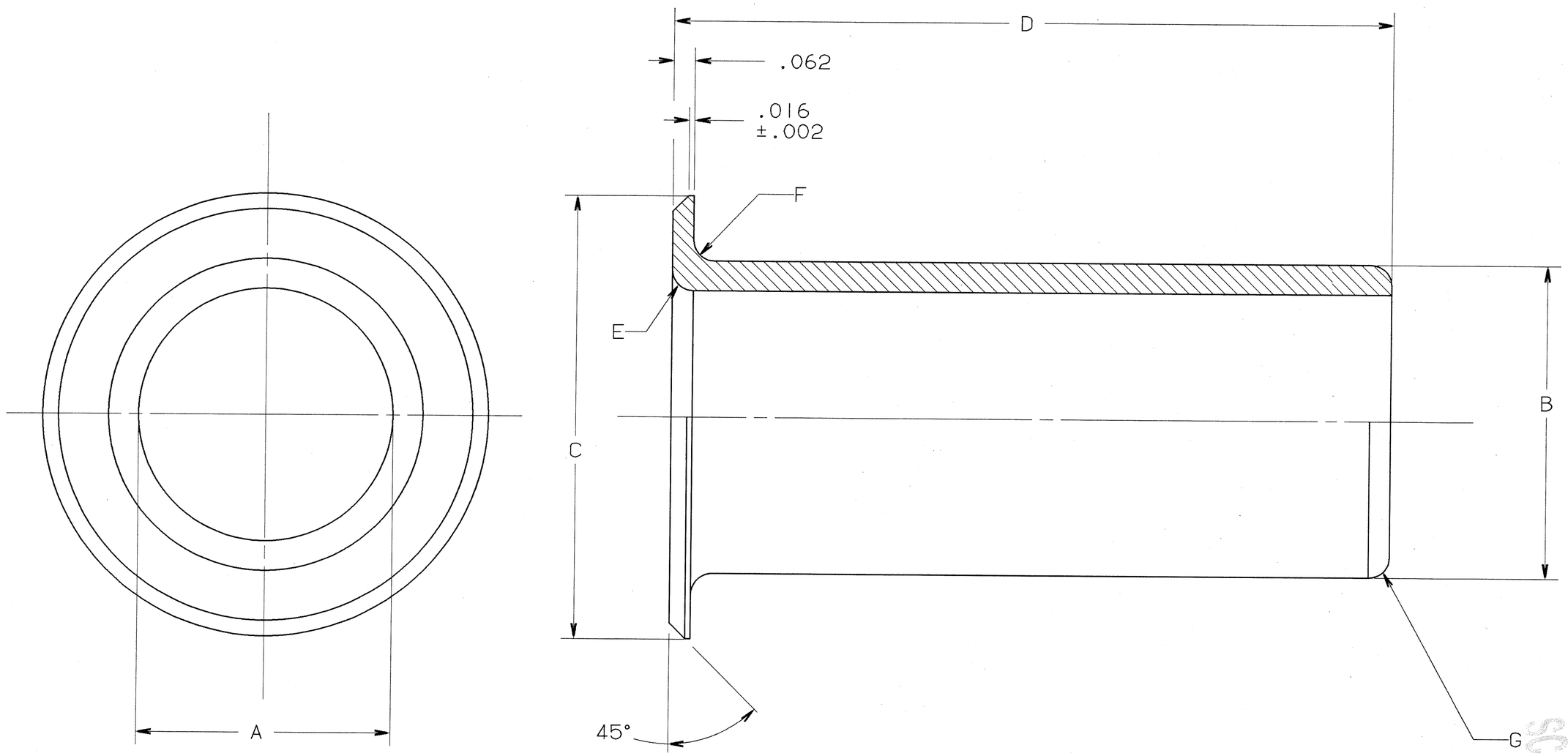

SEE SHEET 1

TYPE II

NOTES:

THE USE OF THIS DOCUMENT IS UNLIMITED. HOWEVER, DOCUMENTS REFERENCED HEREON MAY CONTAIN LIMITED RIGHTS DATA.

COMPUTER GENERATED DRAWING

SIZE	FSCM NO.		REV.
C	77820	10-35910	C
SCALE	WT.	REF	SHEET 2

TAB.

10-35910