NB6N11S

3.3 V 1:2 AnyLevel™ Input to LVDS Fanout Buffer / Translator

ON Semiconductor®

www.onsemi.com

Description

The NB6N11S is a differential 1:2 Clock or Data Receiver and will accept AnyLevel input signals: LVPECL, CML, LVCMOS, LVTTL, or LVDS. These signals will be translated to LVDS and two identical copies of Clock or Data will be distributed, operating up to 2.0 GHz or 2.5 Gb/s, respectively. As such, the NB6N11S is ideal for SONET, GigE, Fiber Channel, Backplane and other Clock or Data distribution applications.

The NB6N11S has a wide input common mode range from GND + 50 mV to V_{CC} − 50 mV. Combined with the 50 Ω internal termination resistors at the inputs, the NB6N11S is ideal for translating a variety of differential or single−ended Clock or Data signals to 350 mV typical LVDS output levels.

The NB6N11S is functionally equivalent to the EP11, LVEP11, SG11 or 7L11M devices and is offered in a small, 3 mm X 3 mm, 16−QFN package. Application notes, models, and support documentation are available at www.onsemi.com.

The NB6N11S is a member of the ECLinPS MAX™ family of high performance products.

Features

- Maximum Input Clock Frequency > 2.0 GHz
- Maximum Input Data Rate > 2.5 Gb/s
- 1 ps Maximum of RMS Clock Jitter
- Typically 10 ps of Data Dependent Jitter
- 380 ps Typical Propagation Delay
- 120 ps Typical Rise and Fall Times
- Functionally Compatible with Existing 3.3 V LVEL, LVEP, EP, and SG Devices
- These are Pb−Free Devices

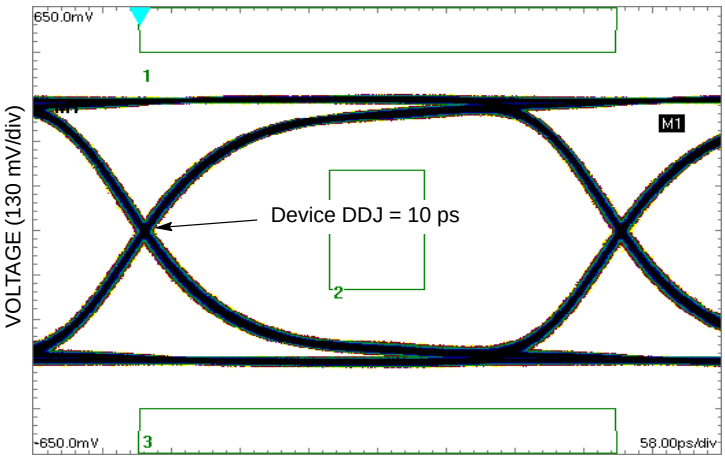

Figure 2. Typical Output Waveform at 2.488 Gb/s with PRBS 2^{23-1} (V_{INPP} = 400 mV; Input Signal DDJ = 14 ps)

1

QFN−16
MN SUFFIX
CASE 485G

MARKING DIAGRAM*

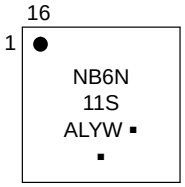

A = Assembly Location
L = Wafer Lot
Y = Year
W = Work Week
▪ = Pb−Free Package

(Note: Microdot may be in either location)

*For additional marking information, refer to Application Note AND8002/D.

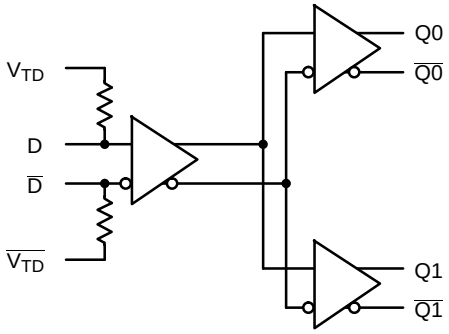

Figure 1. Logic Diagram

ORDERING INFORMATION

See detailed ordering and shipping information in the package dimensions section on page 9 of this data sheet.

© Semiconductor Components Industries, LLC, 2014

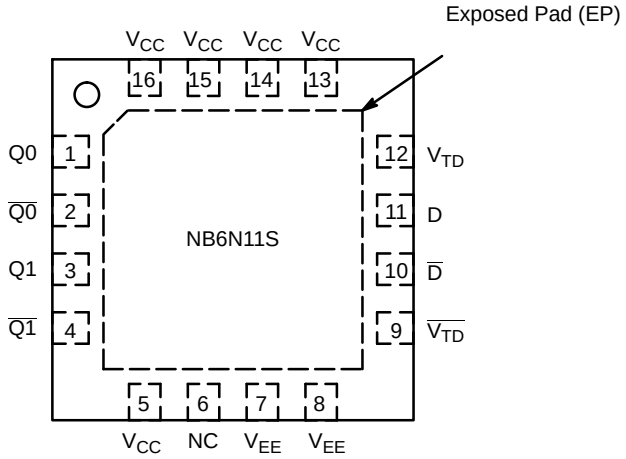

Figure 3. NB6N11S Pinout, 16−pin QFN (Top View)

Table 1. PIN DESCRIPTION

Pin	Name	I/O	Description
1	Q0	LVDS Output	Non−inverted D output. Typically loaded with 100 Ω receiver termination resistor across differential pair.
2	$\overline{Q0}$	LVDS Output	Inverted D output. Typically loaded with 10 Ω receiver termination resistor across differential pair.
3	Q1	LVDS Output	Non−inverted D output. Typically loaded with 100 Ω receiver termination resistor across differential pair.
4	$\overline{Q1}$	LVDS Output	Inverted D output. Typically loaded with 100 Ω receiver termination resistor across differential pair.
5	V_{CC}	−	Positive Supply Voltage
6	NC		No Connect
7	V_{EE}		Negative Supply Voltage
8	V_{EE}		Negative Supply Voltage
9	$\overline{V_{TD}}$	−	Internal 50 Ω termination pin for $\overline{D}$
10	$\overline{D}$	LVPECL, CML, LVDS, LVCMOS, LVTTL	Inverted Differential Clock/Data Input (Note 1)
11	D	LVPECL, CML, LVDS, LVCMOS, LVTTL	Non−inverted Differential Clock/Data Input (Note 1)
12	V_{TD}	−	Internal 50 Ω termination pin for $\overline{D}$
13	V_{CC}	−	Positive Supply Voltage
14	V_{CC}	−	Positive Supply Voltage
15	V_{CC}	−	Positive Supply Voltage
16	V_{CC}	−	Positive Supply Voltage
EP			Exposed pad. The exposed pad (EP) on the package bottom must be attached to a heat−sinking conduit. The exposed pad may only be electrically connected to V_{EE}.

1. In the differential configuration when the input termination pins (VTD/$\overline{VTD}$) are connected to a common termination voltage or left open, and if no signal is applied on D/$\overline{D}$ inputs, then the device will be susceptible to self oscillation.

Table 2. ATTRIBUTES

Characteristics		Value	
ESD Protection	Human Body Model Machine Model Charged Device Model	> 2 kV > 200 V > 1 kV	
Moisture Sensitivity, Indefinite Time Out of Drypack (Note 2)		Pb Pkg	Pb−Free Pkg
	QFN−16	−	1
Flammability Rating	Oxygen Index: 28 to 34	UL 94 V−0 @ 0.125 in	
Transistor Count		225 Devices	
Meets or exceeds JEDEC Spec EIA/JESD78 IC Latchup Test			

2. For additional information, see Application Note AND8003/D.

Table 3. MAXIMUM RATINGS

Symbol	Parameter	Condition 1	Condition 2	Rating	Unit
V_{CC}	Positive Power Supply	GND = 0 V		3.8	V
V_{IN}	Positive Input	GND = 0 V	$V_{IN} \le V_{CC}$	3.8	V
I_{IN}	Input Current Through R_T (50 Ω Resistor)	Static Surge		35 70	mA mA
I_{OSC}	Output Short Circuit Current Line−to−Line (Q to $\overline{Q}$) Line−to−End (Q or $\overline{Q}$ to GND)	 Q or $\overline{Q}$ Q to $\overline{Q}$ to GND	 Continuous Continuous	 12 24	mA
T_A	Operating Temperature Range	QFN−16		−40 to +85	°C
T_{stg}	Storage Temperature Range			−65 to +150	°C
θ_{JA}	Thermal Resistance (Junction−to−Ambient) (Note 3)	0 lfpm 500 lfpm	QFN−16 QFN−16	41.6 35.2	°C/W °C/W
θ_{JC}	Thermal Resistance (Junction−to−Case)	1S2P (Note 3)	QFN−16	4.0	°C/W
T_{sol}	Wave Solder Pb Pb−Free			265 265	°C

Stresses exceeding those listed in the Maximum Ratings table may damage the device. If any of these limits are exceeded, device functionality should not be assumed, damage may occur and reliability may be affected.

3. JEDEC standard multilayer board − 1S2P (1 signal, 2 power) with 8 filled thermal vias under exposed pad.

Table 4. DC CHARACTERISTICS, CLOCK INPUTS, LVDS OUTPUTS V_{CC} = 3.0 V to 3.6 V, GND = 0 V, T_A = −40°C to +85°C

Symbol	Characteristic	Min	Typ	Max	Unit
I_{CC}	Power Supply Current (Note 8)		35	50	mA
DIFFERENTIAL INPUTS DRIVEN SINGLE−ENDED (Figures 15, 16, 20, and 22)					
V_{th}	Input Threshold Reference Voltage Range (Note 7)	GND +100		V_{CC} − 100	mV
V_{IH}	Single−ended Input HIGH Voltage	V_{th} + 100		V_{CC}	mV
V_{IL}	Single−ended Input LOW Voltage	GND		V_{th} − 100	mV
DIFFERENTIAL INPUTS DRIVEN DIFFERENTIALLY (Figures 11, 12, 13, 14, 21, and 23)					
V_{IHD}	Differential Input HIGH Voltage	100		V_{CC}	mV
V_{ILD}	Differential Input LOW Voltage	GND		V_{CC} − 100	mV
V_{CMR}	Input Common Mode Range (Differential Configuration)	GND + 50		V_{CC} − 50	mV
V_{ID}	Differential Input Voltage (V_{IHD} − V_{ILD})	100		V_{CC}	mV
R_{TIN}	Internal Input Termination Resistor	40	50	60	Ω
LVDS OUTPUTS (Note 4)					
V_{OD}	Differential Output Voltage	250		450	mV
ΔV_{OD}	Change in Magnitude of V_{OD} for Complementary Output States (Note 9)	0	1	25	mV
V_{OS}	Offset Voltage (Figure 19)	1125		1375	mV
ΔV_{OS}	Change in Magnitude of V_{OS} for Complementary Output States (Note 9)	0	1	25	mV
V_{OH}	Output HIGH Voltage (Note 5)		1425	1600	mV
V_{OL}	Output LOW Voltage (Note 6)	900	1075		mV

NOTE: Device will meet the specifications after thermal equilibrium has been established when mounted in a test socket or printed circuit board with maintained transverse airflow greater than 500 lfpm. Electrical parameters are guaranteed only over the declared operating temperature range. Functional operation of the device exceeding these conditions is not implied. Device specification limit values are applied individually under normal operating conditions and not valid simultaneously.

4. LVDS outputs require 100 Ω receiver termination resistor between differential pair. See Figure 18.
5. V_{OH}max = V_{OS}max + ½ V_{OD}max.
6. V_{OL}max = V_{OS}min − ½ V_{OD}max.
7. V_{th} is applied to the complementary input when operating in single−ended mode.
8. Input termination pins open, D/$\overline{D}$ at the DC level within V_{CMR} and output pins loaded with R_L = 100 Ω across differential.
9. Parameter guaranteed by design verification not tested in production.

Product parametric performance is indicated in the Electrical Characteristics for the listed test conditions, unless otherwise noted. Product performance may not be indicated by the Electrical Characteristics if operated under different conditions.

Table 5. AC CHARACTERISTICS V_{CC} = 3.0 V to 3.6 V, GND = 0 V; (Note 10)

Symbol	Characteristic	−40°C Min	−40°C Typ	−40°C Max	25°C Min	25°C Typ	25°C Max	85°C Min	85°C Typ	85°C Max	Unit
V_{OUTPP}	Output Voltage Amplitude (@ $V_{INPPmin}$) (Figure 4) $f_{in} \le 1.0$ GHz f_{in}= 1.5 GHz f_{in}= 2.0 GHz	220 200 170	350 300 270		250 200 170	350 300 270		250 200 170	350 300 270		mV
f_{DATA}	Maximum Operating Data Rate	1.5	2.5		1.5	2.5		1.5	2.5		Gb/s
t_{PLH}, t_{PHL}	Differential Input to Differential Output Propagation Delay	270	370	470	270	370	470	270	370	470	ps
t_{SKEW}	Duty Cycle Skew (Note 11) Within Device Skew (Note 16) Device−to−Device Skew (Note 15)		8 5 30	45 25 100		8 5 30	45 25 100		8 5 30	45 25 100	ps
t_{JITTER}	RMS Random Clock Jitter (Note 13) f_{in} = 1.0 GHz f_{in} = 1.5 GHz Deterministic Jitter (Note 14) f_{DATA} = 622 Mb/s f_{DATA} = 1.5 Gb/s f_{DATA} = 2.488 Gb/s		0.5 0.5 6 7 10	1 1 20 20		0.5 0.5 6 7 10	1 1 20 20		0.5 0.5 6 7 10	1 1 20 20	ps
V_{INPP}	Input Voltage Swing/Sensitivity (Differential Configuration) (Note 12)	100		V_{CC}− GND	100		V_{CC}− GND	100		V_{CC}− GND	mV
t_r t_f	Output Rise/Fall Times @ 250 MHz (20% − 80%) Q, $\overline{Q}$	70	120	170	70	120	170	70	120	170	ps

NOTE: Device will meet the specifications after thermal equilibrium has been established when mounted in a test socket or printed circuit board with maintained transverse airflow greater than 500 lfpm. Electrical parameters are guaranteed only over the declared operating temperature range. Functional operation of the device exceeding these conditions is not implied. Device specification limit values are applied individually under normal operating conditions and not valid simultaneously.

10. Measured by forcing $V_{INPPmin}$ with 50% duty cycle clock source and V_{CC} − 1400 mV offset. All loading with an external R_L = 100 Ω across “D” and “$\overline{D}$” of the receiver. Input edge rates 150 ps (20%−80%).
11. See Figure 17 differential measurement of $t_{skew} = |t_{PLH} - t_{PHL}|$ for a nominal 50% differential clock input waveform @ 250 MHz.
12. Input voltage swing is a single−ended measurement operating in differential mode.
13. RMS jitter with 50% Duty Cycle clock signal at 750 MHz.
14. Deterministic jitter with input NRZ data at PRBS 2^{23}−1 and K28.5.
15. Skew is measured between outputs under identical transition @ 250 MHz.
16. The worst case condition between Q0/$\overline{Q0}$ and Q1/$\overline{Q1}$ from D, $\overline{D}$, when both outputs have the same transition.

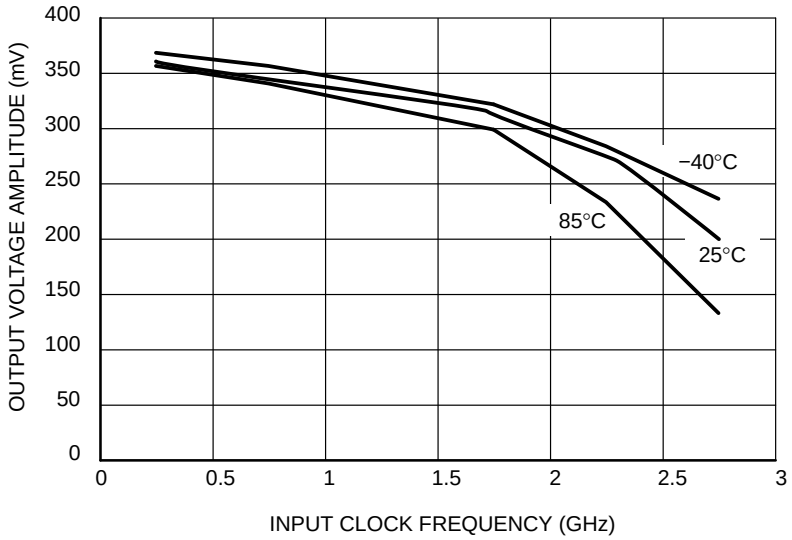

Figure 4. Output Voltage Amplitude (V_{OUTPP}) versus Input Clock Frequency (f_{in}) and Temperature (@ V_{CC} = 3.3 V)

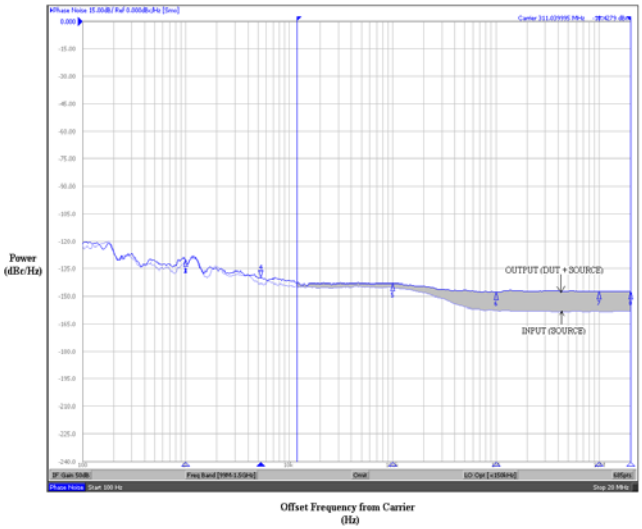

Figure 5. Typical Phase Noise Plot at $f_{carrier}$ = 311.04 MHz

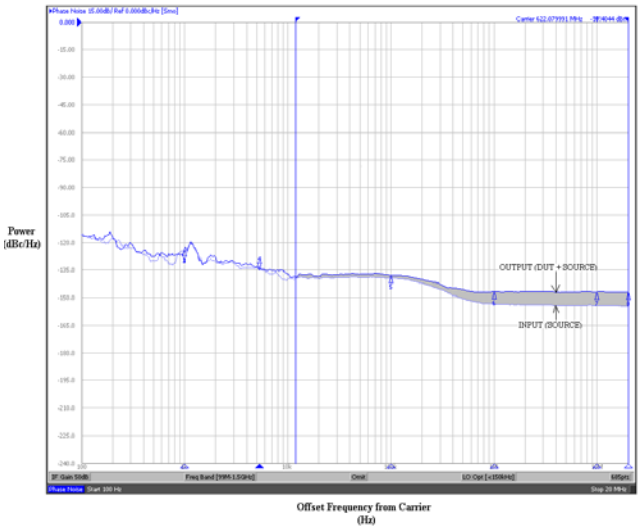

Figure 6. Typical Phase Noise Plot at $f_{carrier}$ = 622.08 MHz

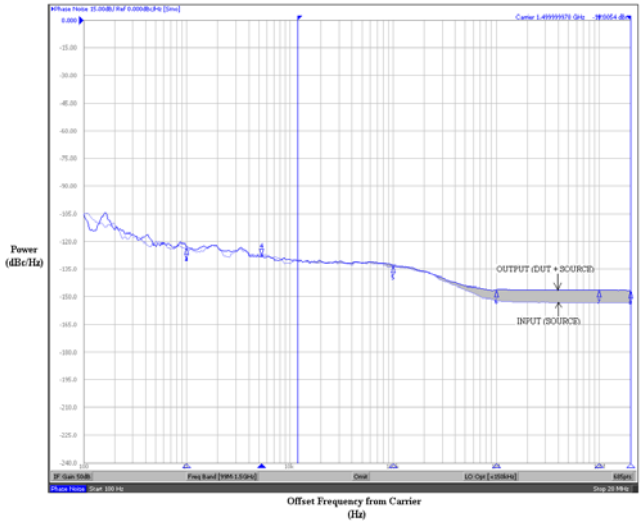

Figure 7. Typical Phase Noise Plot at $f_{carrier}$ = 1.5 GHz

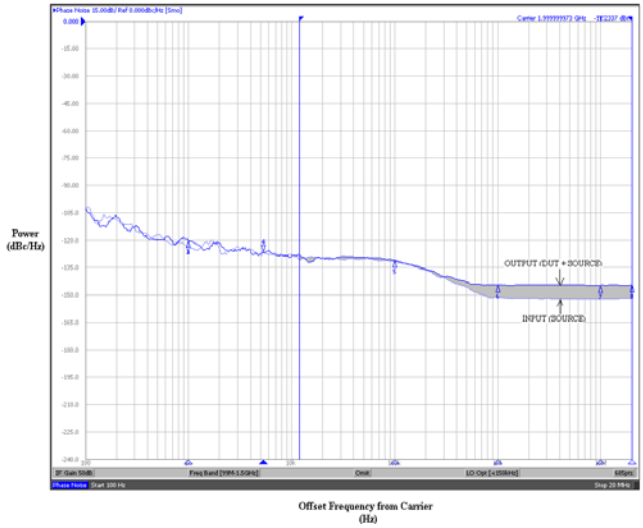

Figure 8. Typical Phase Noise Plot at $f_{carrier}$ = 2 GHz

The above phase noise plots captured using Agilent E5052A show additive phase noise of the NB6N11S device at frequencies 311.04 MHz, 622.08 MHz, 1.5 GHz and 2 GHz respectively at an operating voltage of 3.3 V in room temperature. The RMS Phase Jitter contributed by the device (integrated between 12 kHz and 20 MHz; as shown in the shaded region of the plot) at each of the frequencies is 96 fs, 40 fs, 15 fs and 14 fs respectively. The input source used for the phase noise measurements is Agilent E8663B.

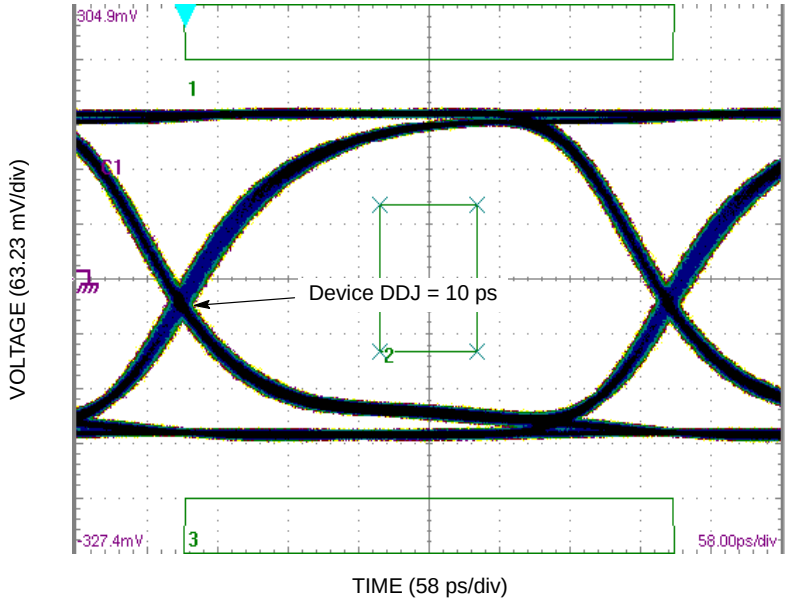

Figure 9. Typical Output Waveform at 2.488 Gb/s with PRBS 2^{23-1} and OC48 mask (V_{INPP} = 100 mV; Input Signal DDJ = 14 ps)

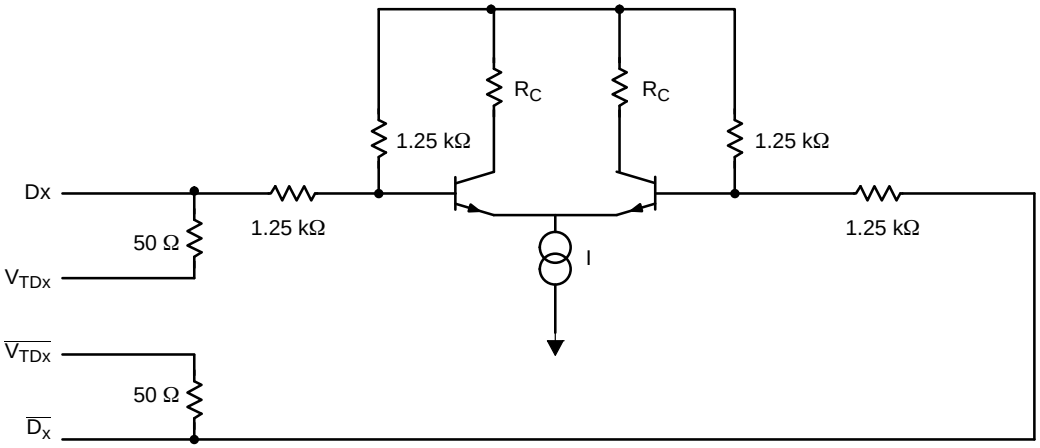

Figure 10. Input Structure

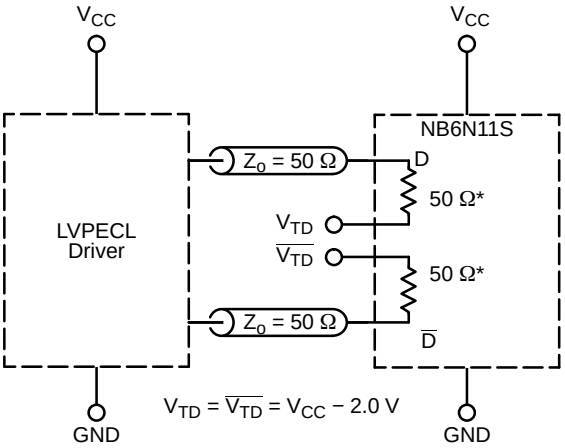

Figure 11. LVPECL Interface

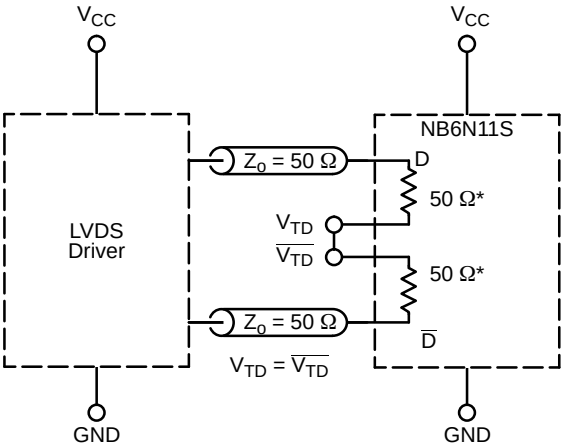

Figure 12. LVDS Interface

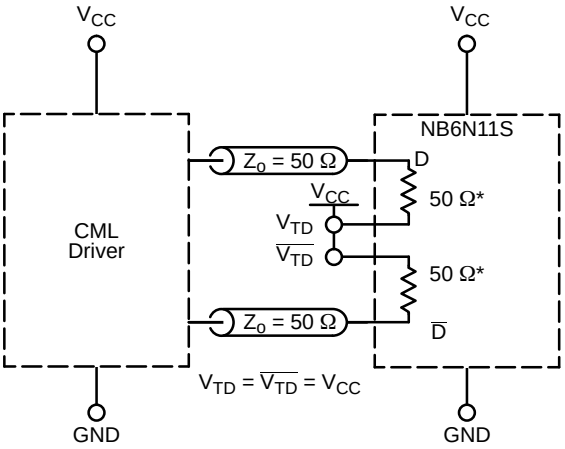

Figure 13. Standard 50 Ω Load CML Interface

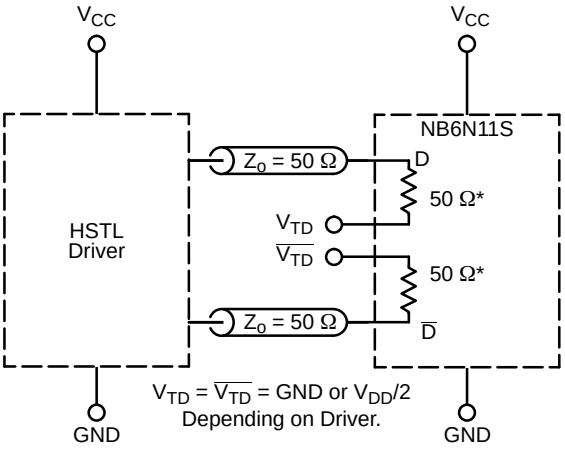

Figure 14. HSTL Interface

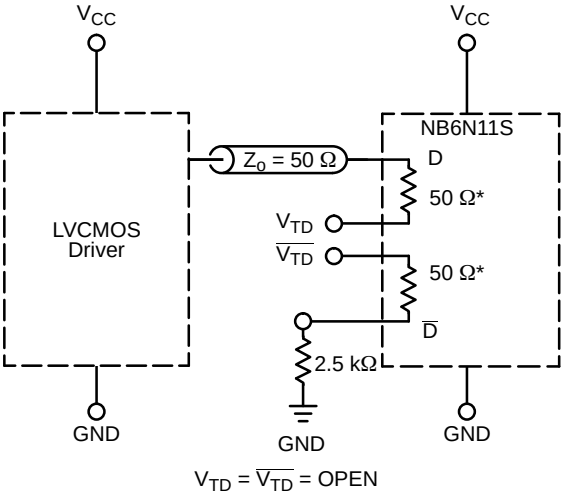

Figure 15. LVCMOS Interface

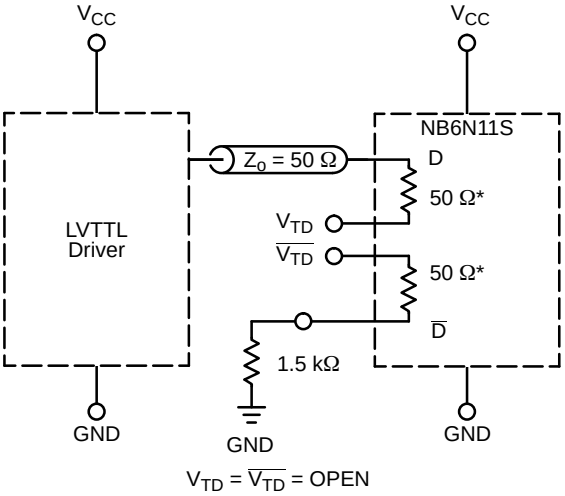

Figure 16. LVTTL Interface

*R_{TIN}, Internal Input Termination Resistor.

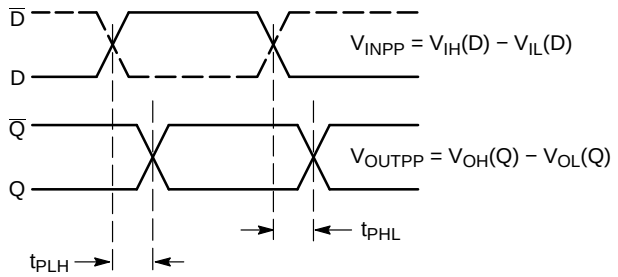

Figure 17. AC Reference Measurement

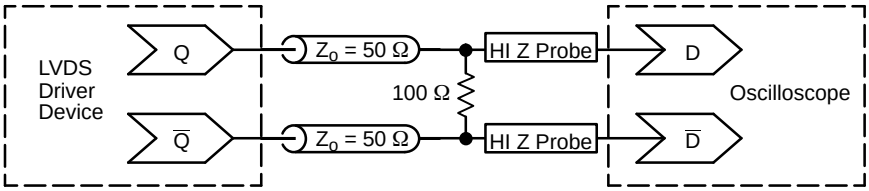

Figure 18. Typical LVDS Termination for Output Driver and Device Evaluation

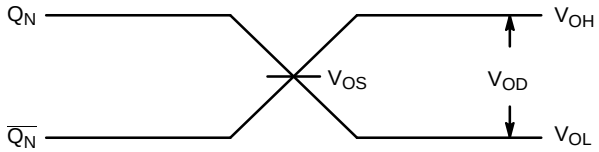

Figure 19. LVDS Output

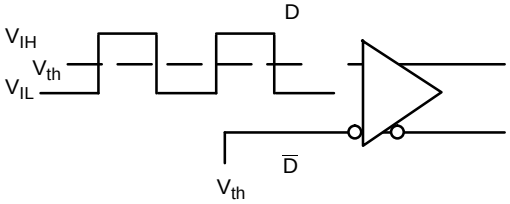

Figure 20. Differential Input Driven Single−Ended

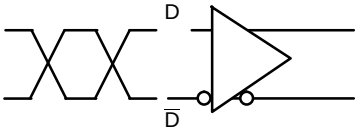

Figure 21. Differential Inputs Driven Differentially

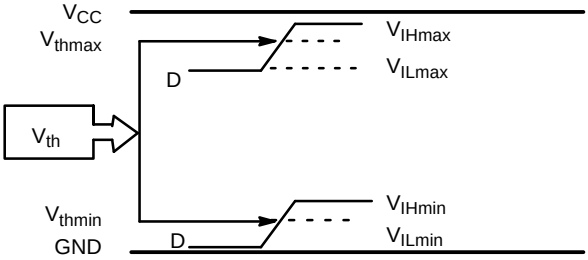

Figure 22. V_{th} Diagram

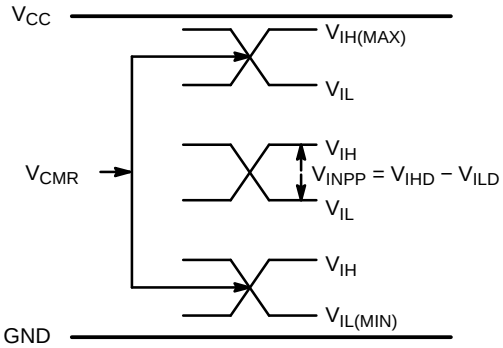

Figure 23. V_{CMR} Diagram

ORDERING INFORMATION

Device	Package	Shipping†
NB6N11SMNG	QFN−16, 3 X 3 mm (Pb−Free)	123 Units / Rail
NB6N11SMNR2G	QFN−16, 3 X 3 mm (Pb−Free)	3000 / Tape & Reel

†For information on tape and reel specifications, including part orientation and tape sizes, please refer to our Tape and Reel Packaging Specifications Brochure, BRD8011/D.

AnyLevel and ECLinPS MAX are trademarks of Semiconductor Components Industries, LLC (SCILLC).

1

SCALE 2:1

QFN16 3x3, 0.5P
CASE 485G
ISSUE G

DATE 08 OCT 2021

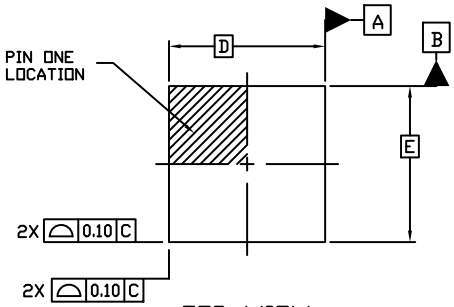

TOP VIEW

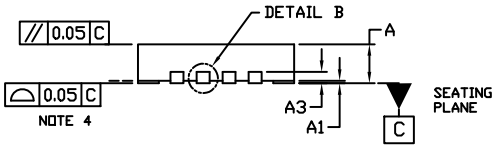

SIDE VIEW

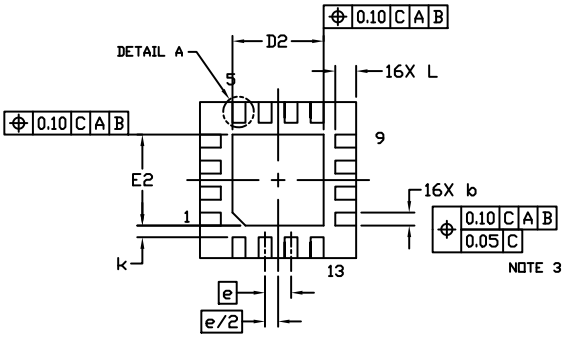

BOTTOM VIEW

NOTES:

1. DIMENSIONING AND TOLERANCING PER ASME Y14.5M, 1994.
2. CONTROLLING DIMENSION: MILLIMETERS
3. DIMENSION b APPLIES TO PLATED TERMINAL AND IS MEASURED BETWEEN 0.15 AND 0.30 MM FROM THE TERMINAL TIP.
4. COPLANARITY APPLIES TO THE EXPOSED PAD AS WELL AS THE TERMINALS.

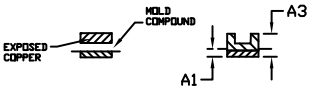

DETAIL B
ALTERNATE CONSTRUCTIONS

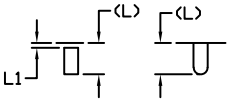

DETAIL A
ALTERNATE TERMINAL CONSTRUCTIONS

DIM	MILLIMETERS		
	MIN.	NOM.	MAX.
A	0.80	0.90	1.00
A1	0.00	0.03	0.05
A3	0.20 REF		
b	0.18	0.24	0.30
D	3.00 BSC		
D2	1.65	1.75	1.85
E	3.00 BSC		
E2	1.65	1.75	1.85
e	0.50 BSC		
k	0.18 TYP		
L	0.30	0.40	0.50
L1	0.00	0.08	0.15

MOUNTING FOOTPRINT

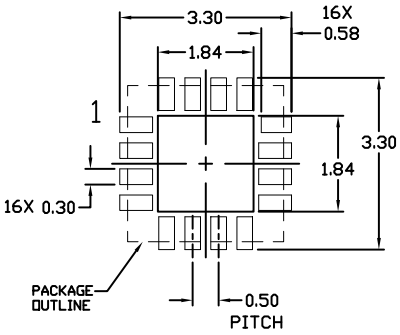

GENERIC MARKING DIAGRAM*

XXXXX	= Specific Device Code
A	= Assembly Location
L	= Wafer Lot
Y	= Year
W	= Work Week
▪	= Pb−Free Package

(Note: Microdot may be in either location)

*This information is generic. Please refer to device data sheet for actual part marking. Pb−Free indicator, “G” or microdot “▪”, may or may not be present. Some products may not follow the Generic Marking.

DOCUMENT NUMBER:	**98AON04795D**	Electronic versions are uncontrolled except when accessed directly from the Document Repository. Printed versions are uncontrolled except when stamped “CONTROLLED COPY” in red.
DESCRIPTION:	**QFN16 3X3, 0.5P**	**PAGE 1 OF 1**

onsemi and onsemi are trademarks of Semiconductor Components Industries, LLC dba **onsemi** or its subsidiaries in the United States and/or other countries. **onsemi** reserves the right to make changes without further notice to any products herein. **onsemi** makes no warranty, representation or guarantee regarding the suitability of its products for any particular purpose, nor does **onsemi** assume any liability arising out of the application or use of any product or circuit, and specifically disclaims any and all liability, including without limitation special, consequential or incidental damages. **onsemi** does not convey any license under its patent rights nor the rights of others.

onsemi, onsemi, and other names, marks, and brands are registered and/or common law trademarks of Semiconductor Components Industries, LLC dba "**onsemi**" or its affiliates and/or subsidiaries in the United States and/or other countries. **onsemi** owns the rights to a number of patents, trademarks, copyrights, trade secrets, and other intellectual property. A listing of **onsemi**'s product/patent coverage may be accessed at www.onsemi.com/site/pdf/Patent−Marking.pdf. **onsemi** reserves the right to make changes at any time to any products or information herein, without notice. The information herein is provided "as−is" and **onsemi** makes no warranty, representation or guarantee regarding the accuracy of the information, product features, availability, functionality, or suitability of its products for any particular purpose, nor does **onsemi** assume any liability arising out of the application or use of any product or circuit, and specifically disclaims any and all liability, including without limitation special, consequential or incidental damages. Buyer is responsible for its products and applications using **onsemi** products, including compliance with all laws, regulations and safety requirements or standards, regardless of any support or applications information provided by **onsemi**. "Typical" parameters which may be provided in **onsemi** data sheets and/or specifications can and do vary in different applications and actual performance may vary over time. All operating parameters, including "Typicals" must be validated for each customer application by customer's technical experts. **onsemi** does not convey any license under any of its intellectual property rights nor the rights of others. **onsemi** products are not designed, intended, or authorized for use as a critical component in life support systems or any FDA Class 3 medical devices or medical devices with a same or similar classification in a foreign jurisdiction or any devices intended for implantation in the human body. Should Buyer purchase or use **onsemi** products for any such unintended or unauthorized application, Buyer shall indemnify and hold **onsemi** and its officers, employees, subsidiaries, affiliates, and distributors harmless against all claims, costs, damages, and expenses, and reasonable attorney fees arising out of, directly or indirectly, any claim of personal injury or death associated with such unintended or unauthorized use, even if such claim alleges that **onsemi** was negligent regarding the design or manufacture of the part. **onsemi** is an Equal Opportunity/Affirmative Action Employer. This literature is subject to all applicable copyright laws and is not for resale in any manner.

PUBLICATION ORDERING INFORMATION

LITERATURE FULFILLMENT:
Email Requests to: orderlit@onsemi.com

onsemi Website: www.onsemi.com

TECHNICAL SUPPORT
North American Technical Support:
Voice Mail: 1 800−282−9855 Toll Free USA/Canada
Phone: 011 421 33 790 2910

Europe, Middle East and Africa Technical Support:
Phone: 00421 33 790 2910
For additional information, please contact your local Sales Representative

◊