NOTES:

1. MATERIALS AND FINISHES:
   BODY - BRASS, ALBALOY PLATING
   CONTACT - BERYLLIUM COPPER, GOLD PLATING
   INSULATORS - PTFE, NATURAL

2. ELECTRICAL:
   A. IMPEDANCE: 50 OHM
   B. FREQUENCY RANGE: DC - 6 GHz
   C. VSWR(RETURN LOSS): -32 dB TO 3 GHz MAX.
   -25 dB TO 6 GHz MAX.
   D. DIELECTRIC WITHSTANDING VOLTAGE: 1000 VRMS, MIN.

3. MECHANICAL:
   A. DURABILITY: 100 CYCLES MIN.
   B. TEMPERATURE RANGE: -40° C TO 80° C

4. CONTACT PIN MUST WITHSTAND A 6 LBS. AXIAL FORCE AND A 4 IN-OZ. MIN TORQUE

THIRD ANGLE PROJ.

REVISIONS				
REV	DESCRIPTION	DATE	ECN	APPR
A	RELEASE TO MFG.	18-Feb-19	10724	CJV

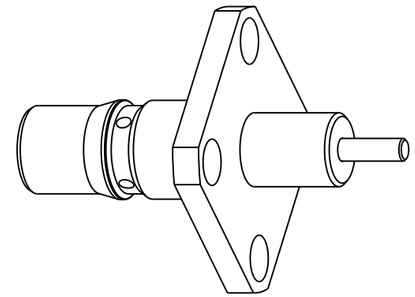

SCALE 3.000

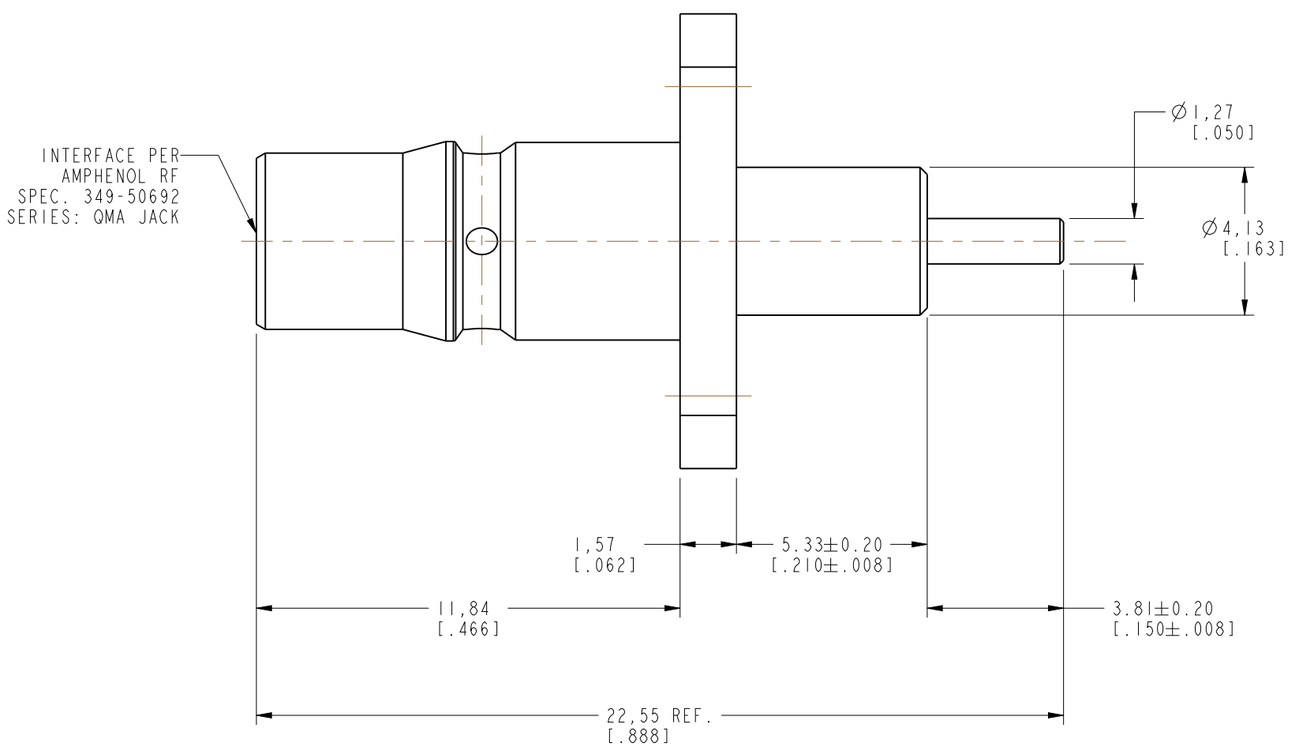

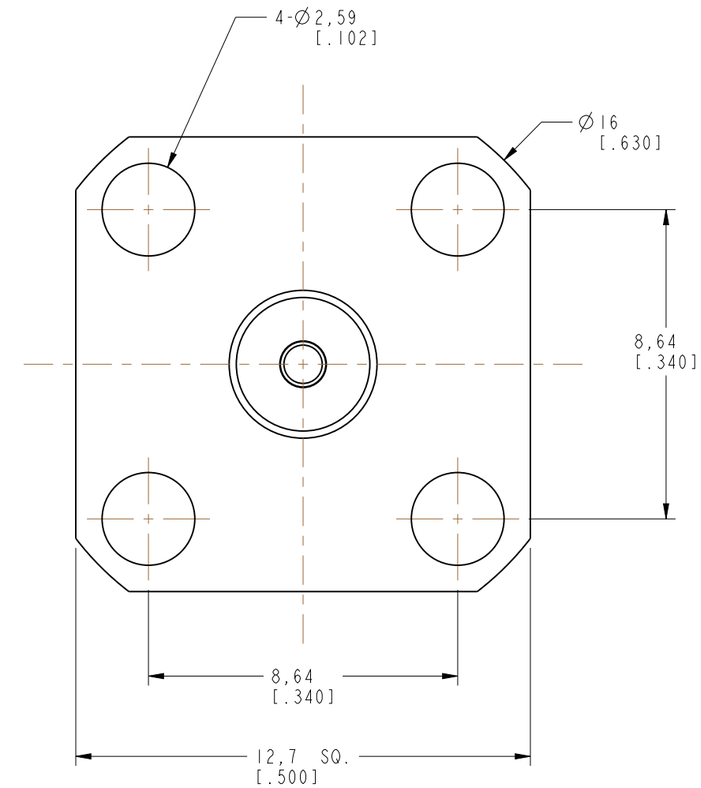

CUSTOMER OUTLINE DRAWING

ALL OTHER SHEETS ARE FOR INTERNAL USE ONLY

UNLESS OTHERWISE SPECIFIED, DIMENSIONS ARE IN METRIC AND TOLERANCES ARE:

<0.5mm	0.5 - 6mm	6 - 30mm	30 - 120mm	ANGLES
± 0.05mm	±0.1mm	±0.2mm	± 0.3mm	±1°

NOTICE - These drawings, specifications, or other data (1) are, and remain the property of Amphenol corp. (2) must be returned upon request; and (3) are confidential and not to be disclosed to any person other than those to whom they are given by Amphenol Corp. the furnishing of these drawings, specifications, or other data by Amphenol Corp., or to any other person to anyone for any purpose is not to be regarded by implication or otherwise in any manner licensing, granting rights to permitting such holder or any other person to manufacture, use or sell any product, process or design, patented or otherwise, that may in any way be related to or disclosed by said drawings, specifications, or other data.

MATERIAL
-

REFERENCE
EAR#
REF: 930-112J-51S

CONFIGURATION LEVEL: In Work

FINISH

DRAWN	M.ZHANG	DATE 18-Feb-19
ENGINEER	S.DUAN	DATE 18-Feb-19
APPROVED	S.HSIEH	DATE 18-Feb-19
CAD FILE		

TITLE
QMA(F) PANEL RECEPT.
EXTENDED TEFLON/CONTACT
(.210"/.150")

SCALE: 6.0:1.0 | SHEET 2 OF 2

DWG SIZE B | REV A

Amphenol RF
www.amphenolrf.com

DRAWING NO. QMA6551A1-014-AT30GM-50
ITEM NO. 706551ABD02RB5F
PART NO. 134103