承诺书

PRODUCT FOR APPROVAL

我们很高兴向您提交我们的规格图纸和样品供您批准。 经批准后请附上您授权签名的一份副本寄回给我们。本规格承认书如客户未回签即下订单，则为承认此份规格承认书。

(We are pleased in submitting you here with our specification drawing together with samples for your approval. Please return to us one copy with your authorized signatures as approved.If the customer places an order without countersigning this specification acknowledgement,it is an acknowledgement of this specification acknowledgement.)

客户/ CUSTOMER ：

类型/ DESCRIPTION ： 功率贴片电感

产品型号/ PART NUMBER ： **HTDG0530H-100M-P**

客户编号/ CUSTOMER P/N ：

客户代号/ CUSTOMER CODE ：

发行日期/ ISSUE DATE ： **2022-04-07**

公司/COMPANY			客户/CUSTOMER
编制 PREPARED BY	审核 CHECKED BY	批准 APPROVED BY	批准 APPROVED BY
Siyi Zhang	Tao Zeng	Liang Zheng	

规格书更改备忘录：

REV 版本	DESCRIPTIO 更改内容	REASON 更改原因	CHANGED BY 更改人	DATE 更改日期
A0	初版	新发行	张锶镱	2022/04/07

质量责任原则(THE PRINCIPLE OF QUALITY RESPONSIBILITY)

未列入承认书的参数请参考下列标准或相关行业标准：

For the parameters not prescribed in the Specification for Approval, please refer to the following standards or the relative industry standards.

GB/T 15290-94　电子设备用电源变压器和滤波扼流圈总技术条件

GB 2423 电工电子产品基本环境试验规程

GB 2828 逐批检查计数抽样程序及抽样表(适用于连续批的检查)

GB 2829 周期检查计数抽样程序及抽样表(适用于生产过程稳定性的检查)。

GB 8554 电子和通信设备用变压器和电感器测试方法及试验程序。

GB 4943-2001 信息技术的安全。

SJ 2488　电子设备用变压器、阻流和铁芯噪声测试方法。

SJ 2916-88 彩色电视广播接收机用开关电源变压器总技术条件。

SJ 3270-90 隔离变压器的安全要求。

GJB360A-96　《电子及电气元件试验方法》

UL1446　绝缘材料认证标准

IPC 9592　电脑和通信电源要求

IPC 020D　联合行业标准

IEC1007　电子和电信设备用变压器和电感器 测量方法和试验程序

1. 安装尺寸及外形图(CONFIGRATION & DIMENSIONS)

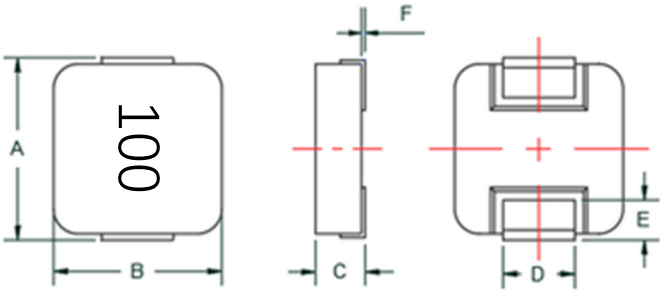

编号	A	B	C	D	E	F
尺寸（mm）	5.7Max0	5.4Max	3.00Max	2.2±0.30	1.1±0.30	0～0.10

2. 线圈联线图(SCHEMATIC)

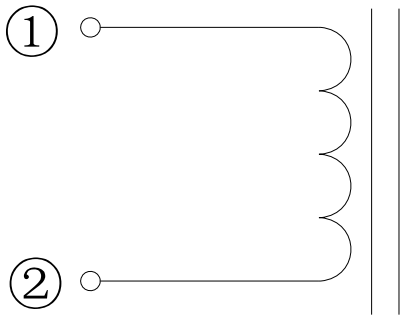

3. 推荐焊盘(Recommend Land Pattern Dimensions)

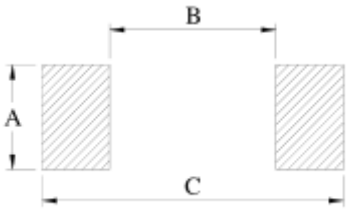

A	2.50
B	3.00
C	7.00

Unit：mm

4. 电气特性(ELECTRIC CHARACTERICS) @25℃

编号 NO.	项目 Item	测试表现 Test Performance	测试条件 Test Condition	测试设备 Test Equipment
1	L(+0Adc)	10uH±20%	100KHz,1V	WK3260B+WK3265B or Equivalent
2	L(+2.8Adc)	Cause L0 to drop approximately30% 使L0下降约30%		
3	DCR	130mΩ max	25℃	HIOKI-RM3544 或等同
4	Isat	2.8A		
5	Irms	2.5A，△T≤40℃		
Note : The rated current as listed is either the Isat or the Irms depending on which value is lower. 说明：饱和电流和温升电流两者以较低者定义为额定电流。				

5.电流曲线

5.1 电感-电流曲线(INDUCTANCE VS DC CURRENT)

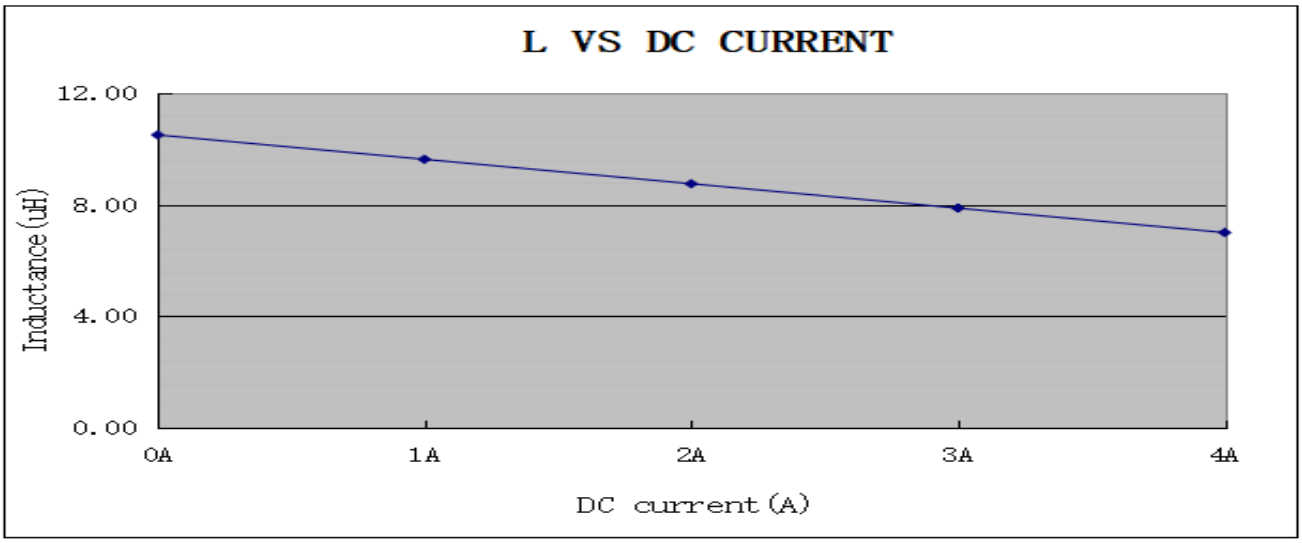

5.2 温升-电流曲线（TEMPERATURE RISE VS DC CURRENT）

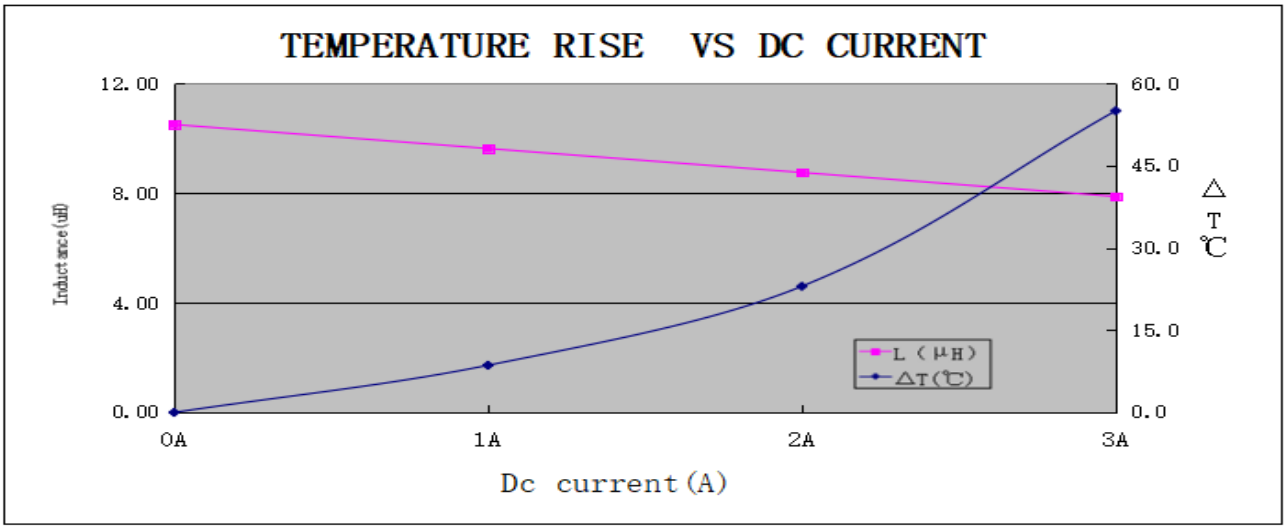

6.可靠性试验要求(RELIABILITY TEST REQUIREMENT)

Test items 测试项目	Mandatory Field 必选项目	Test content 测试内容	Remark (备注)
Cold Operating Test (低温工作试验)	√	GB2423.1 方法Ad	
Heat Operating Test (高温工作试验)	√	GB2423.2 方法Bd	
Cold Storage Test (低温存贮试验)	√	GB2423.1 方法Ab	
Heat Storage Test (高温存贮试验)	√	GB2423.2 方法Bb	
Steady Damp Heat Test (恒定湿热试验)	√	GB2423.3 方法Cb	
Circular Damp Heat Test (交变湿热试验)		GB2423.4 方法Db	
Temperature Cycling Test (温度循环试验)	√	GB2423.22 方法Nb	
Temperature Shock Test (温度冲击试验)	√	GB2423.22 方法Na	
Vibration Test (振动试验)	√	GB2423.10~15 方法 Fc,Fdb	
Mechanical Shock Test(Bump) (机械冲击(碰撞)试验)		GB2423.5 方法Eb	
Free Fall Test(跌落试验)		GB2423.8 方法Ed	
盐雾试验	√	GJB360A-96	
耐焊接热试验		GJB360A-96	
Solderability(可焊性试验)	√	GJB360A-96	
长霉试验		GJB1435-92	
High Temperature Step Stress Test (高温步进应力试验)		Enhancement Test Specifications (可靠性强化试验规范	

7.推荐焊接条件(SOLDERING CONDITION RECOMMENDED)

器件焊接方式：回流焊(Device welding method: reflow welding)

7.1 回流焊焊接方式及推荐炉温曲线(Reflow welding method and recommended furnace temperature curve)

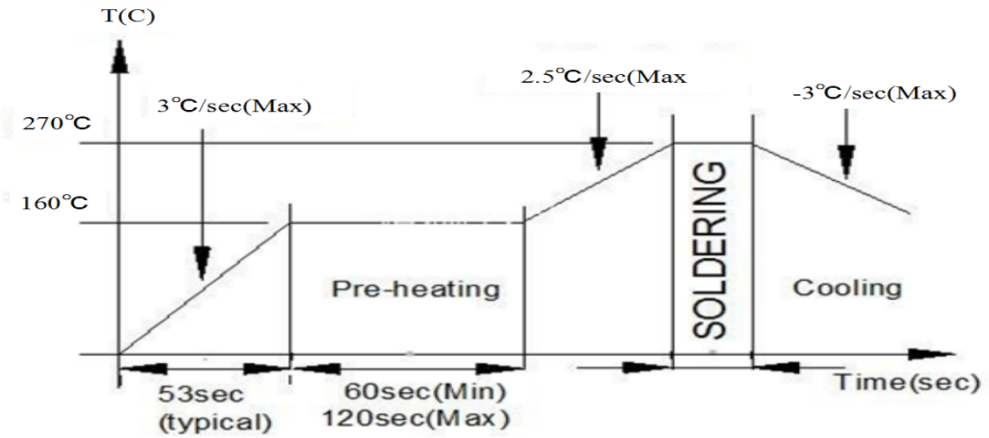

无铅无器件推荐温度要求(Recommended temperature requirements for lead-free devices)
（IPC/JEDEC J-STD-020C）

Package Thickness	Volume mm^3 ＜ 350	Volume mm^3 350-2000	Volume mm^3 ＞ 2000
＜ 1.6mm	260℃	260℃	260℃
1.6mm～2.5mm	260℃	250℃	245℃
＞ 2.5mm	250℃	245℃	245℃

7.2 高温耐热性描述（在 265℃的熔融铅料中，停留时间不少于 10 秒，3 次最少，无质量问题。）
High temperature heat resistance description (in the molten lead material at 265 ℃, the residence time shall not be less than 10 seconds, the least three times, and there is no quality problem.)

7.3 返修温度和时间（温度：400℃；时间：不少于 5 秒。）
Repair temperature and time (temperature: 400oC; time: not less than 5S.)

7.4 焊接次数（元器件能承受的焊接次数不少于 3 次。）
Welding times (the welding times that components can withstand shall not be less than 3 times.)

8.包装及外观要求(PACKAGE AND SEMBLABLE REQUIREMENT)

8.1 包装(PACKAGE REQUIREMENT)

① 包装箱上标明产品型号、名称、数量、生产周期，出厂日期、承制方名称及出厂检验章；
（可按客户要求印字包装）
The packing box shall be marked with product model, name, quantity, production cycle, date, manufacturer's name and inspection seal;
(printed and packaged according to customer requirements)

② 不同生产周期号的同一产品不得放入同一包装箱内；
The same product with different production cycle numbers shall not be put into the same packing box;

③ 货物运达客户方后，包装箱封条应完好，箱体无破损、开裂等现象；
After the goods arrive at the customer, the seal of the packing box shall be intact, and the box shall be free of damage, cracking and other phenomena;

④ 开箱后，箱内包装材料无破损。产品应分层、间隔包装，不满一箱应加垫填充物。
After unpacking, the packing materials in the box shall be free from damage. The products shall be packed in layers and at intervals, and padding shall be added if it is less than one box.

8.2 外观(SEMBLABLE REQUIREMENT)

① 外观整洁，印字清晰。
Clean appearance and clear printing.

8.3 检验(TEST REQUIREMENT)

① 产品生产中必须进行全数进行电气性能；
All electrical performance tests must be carried out during product production;

② 产品出货前按批次，必须根据承认书按国家行业标准进行抽样检验，合格后出具出厂检验报告，记录抽样测试数据，在每批次包装尾箱中放置一份；

注：批次按定单号发货为准。

Before shipment, the products must be sampled and inspected according to the national and industrial standards according to the letter of acceptance. After passing the inspection, the factory inspection report shall be issued and the sampling records shall be recorded.One copy of sample test data shall be placed in the tail box of each batch of packaging;

Note: the batch shall be delivered according to the order number.

8.4 包装示意图：

8.4.1 卷轴尺寸(Reel Dimension)

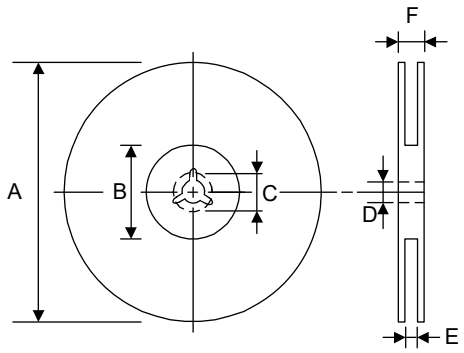

TYPE	A	B	C	D	E	F
12mm	330	100	21.0±0.8	$13^{+0.5}_{-0.2}$	12±0.3	18.4

8.4.2 载带尺寸(Tape Dimension)

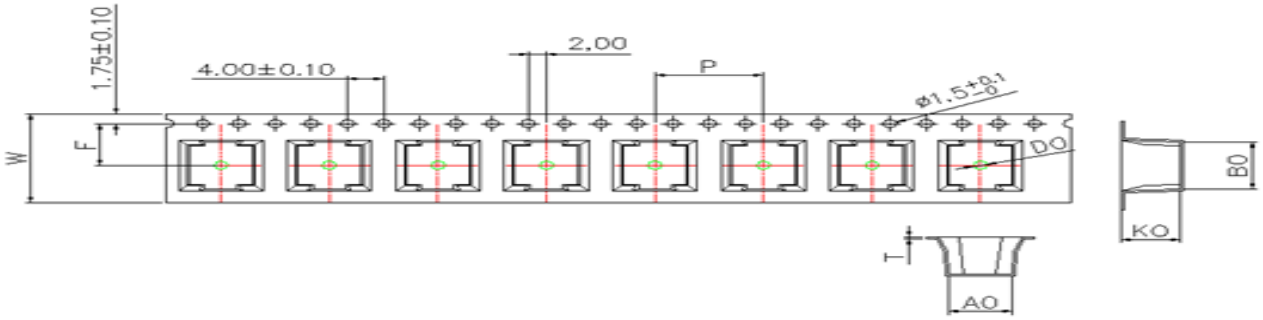

Q'TY (PCS)	A0	B0	KO	W	P	T
2000	5.4±0.1	6.0±0.1	3.2±0.1	12.0±0.3	8.0±0.1	0.30±0.05

8.4.3 包装方式(Packaging method)

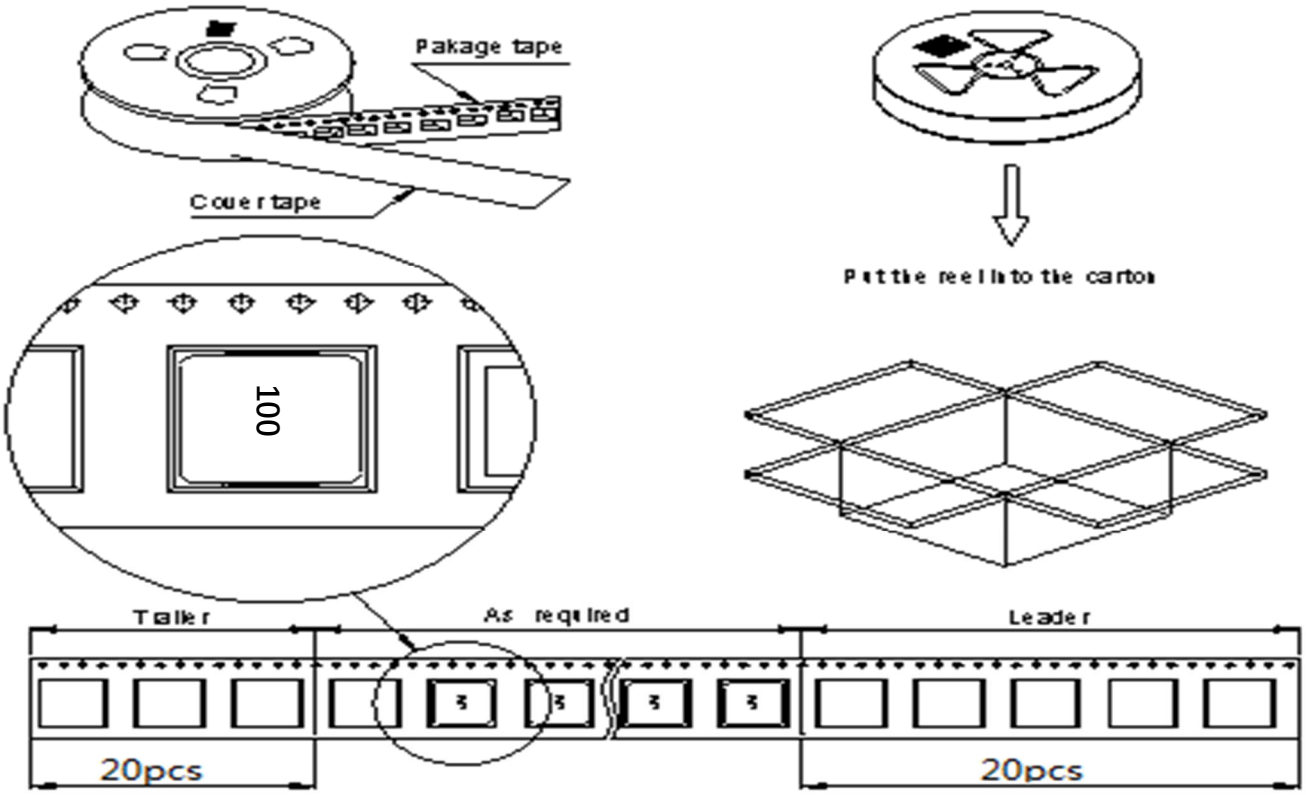

①一卷包装(Reel)：2000Pcs；
② 小箱装两卷(Inner box)：一共 4000Pcs；
③ 大箱装三小箱(Carton)：一共 12000Pcs.