Product NO.	DOSIN-801-0045			
REV	DESCRIPTION	DWN	DATE	APPROVEN
A	First issue	JIM	2012/11/02	John kine

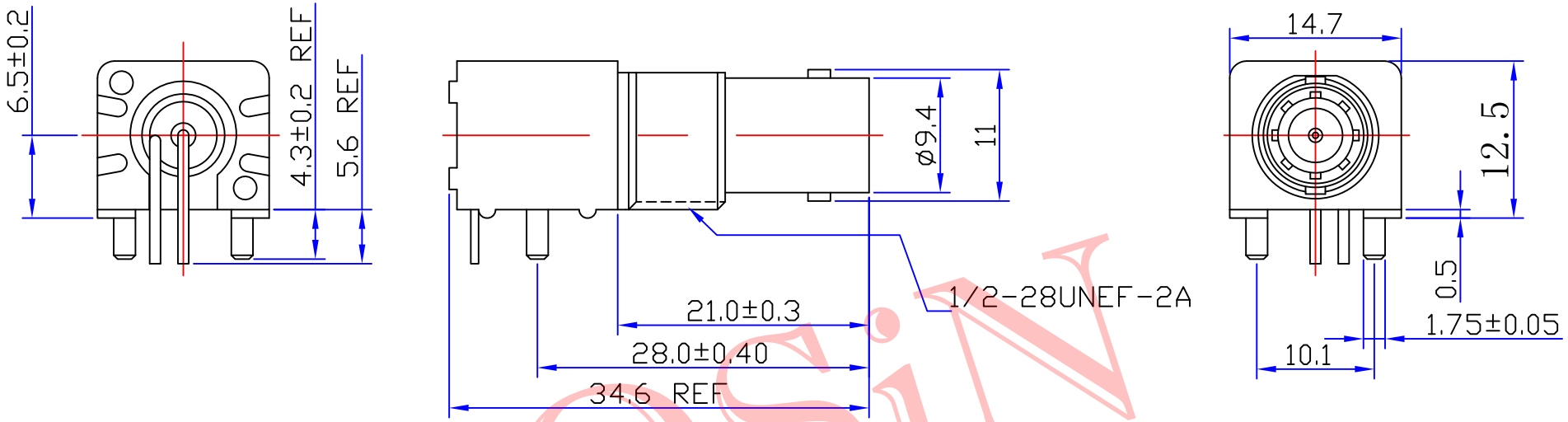

Specifications

Impedance:75 Ohms
Frequency Range:DC~3G
VSWR:1.3MAX
Working Voltage:500V rms @ sea level
Insulation Resistance:5000 Ohms min
Temperature Range:-55℃ TO +155℃
Relative Temperature:≤95%(40° C±2° C)
Drawings products are in line with ROHS standards

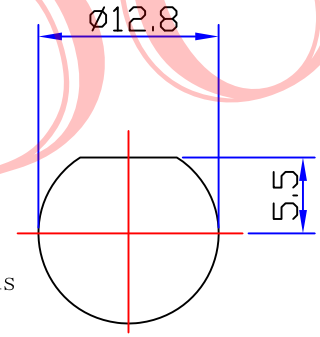

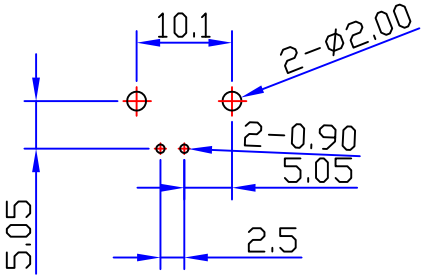

PCB

NO	Component Number	Material	Finish
1	Body	Zinc	NI:80-120u″
2	Center contact	Brass	AU:1u″
3	Lead	Iron	AU:1u″
4	Fixed footrest	Iron	NI:80-120u″
5	Insulator	POM	White
6	Fixed mount	PBT	BLACK
7	Washer	Brass	NI:80-120u″
8	Hex nut	Brass	NI:80-120u″
9			
10			

NOTE:

DRAWN	Zelin. Zhang	2012/11/10	
CHECKED			
APPROVALS	John Kine	12/04.2012	

Tolerance	0-6 ±0.20 6-30 ±0.30 30-120 ±0.5 Angular ±2°
View	
UNIT	MM
SCALE	1:1

DOSIN -RF CONNECTOR
Dosin Industrial(H.K)Co.Ltd
东莞市德索五金电子制品有限公司
Dosin Hardware Electronics Co.,Ltd
E-mail:dosin2005@163.com
dosin2005@dosin-china.com
Web:http://www.dosinconn.com
TEL:(0086)769-81153906
FAX:(0086)769-81875836

Name:	BNC BLACK JACK CONNECTOR (12.5MM)		
SIZE A	Product NO. DOSIN-801-0045		REV B
DateTime 2012/11/02	CAD FILE D/company drawings/BD		SHEET: 1 OF 1

DOSIN