HAOYU

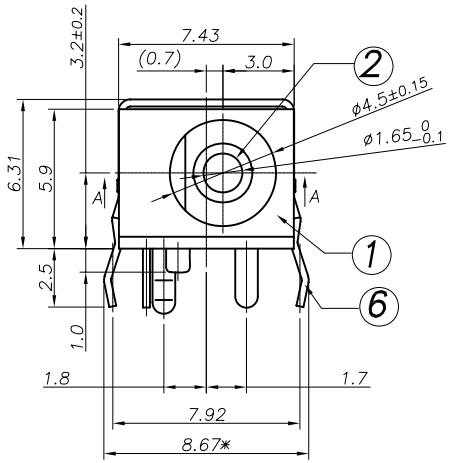

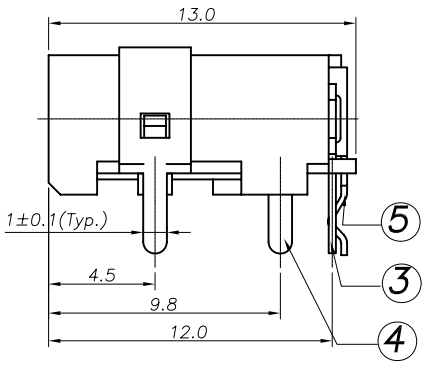

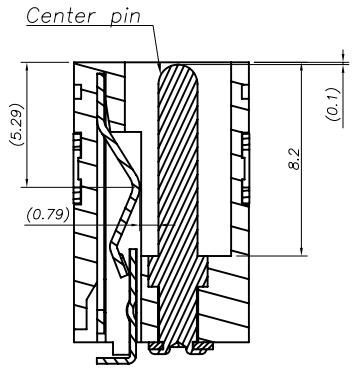

SECTION:A–A

Model No.	DC-030	DC-030-2
Schematic	1, 3, 2	1, 2

Circuit Diagram □:Terminal No.

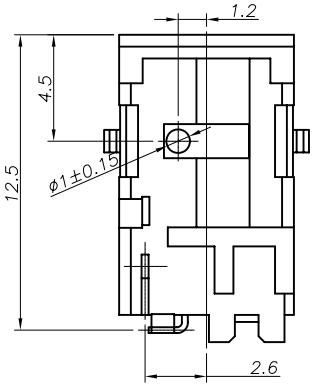

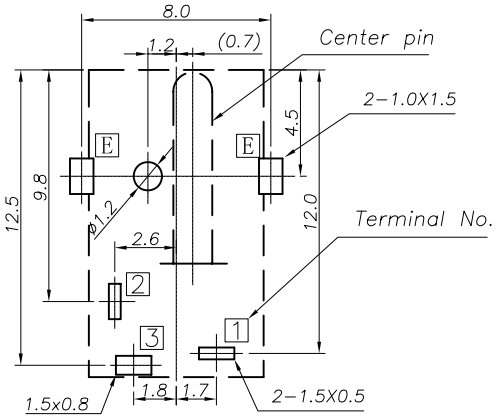

RECOMMENDED P.C.B. LAYOUT
UNSPECIFIED TOLERANCE: ±0.05
(BOTTOM VIEW)

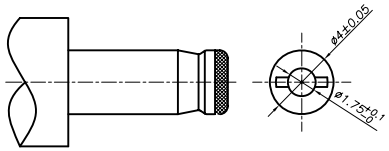

DC MATE PLUG

NO.	PART NAME	MATERIAL	QTY	FINISHING
6	Earth terminal	Brass t0.3	1	Ag-Plating
5	Shunt terminal	Brass t0.25	1	Ag-Plating
4	Tip spring	Phosphor bronze t0.3	1	Ag-Plating
3	Center pin terminal	Brass t0.3	1	Ag-Plating
2	Center pin	Copper alloy	1	Ni-Plating
1	Housing	PBT/PA46	1	

TOLERANCE UNLESS SPECIFIED
UP TO 5mm: ±0.1
ABOVE 5mm: ±0.2
ANGULAR ±1°

NO	DATE	REVISIONS	BY	APPD

TITLE: DC JACK
MODEL:DC-030
UNIT : MM
SCALE: 2:1
ROHS COMPLIANT
DWN
CHK'D
APPD
PRO.AGL:
REV :A0

HAOYU(HONG KONG)LIMITED
皓宇（香港）有限公司